TYPICAL

T5 系列

一体式智能平缝机

ALL-IN ONE INTELLIGENT SEWING MACHINE

使用说明/零件手册

INSTRUCTION BOOK
PARTS CATALOGUE

西安标准工业股份有限公司

为了创造更加美好的环境

请您协作

首先对您使用本公司的产品表示衷心的感谢！

本公司致力于关爱地球环境，制定了“智能制造、绿色制造”的基本方针。当地的公民在环境保护活动中也应该对当地社会、环境二方面尽　　人的微薄之力。

因此，希望您能配合这 计划 ，作为环境保护活动的一环，在平时处理废弃物的时候能多加注意。

1. 不用的包装材料，为了能再次回收利用，请交付给当地相关回收公司进行处理。
2. 使用完的润滑油、请根据相关的法律和规定进行妥善处理。
3. 产品保养或修理需要更换零部件时，有不需要的电路板和电子零件，以及产品废弃时，请作为电子废弃物处理。

In order to create a better environment

Please cooperate with you

First of all, I would like to express my heartfelt thanks to you for using our pr-oducts.

Our company is committed to caring for the earth's environment and has for-mulated the basic policy of "intelligent manufacturing and green manufacturing". Local citizens in environmental protection activities should also do little to the loc-al community, the environment two aspects of everyone's contribution.

Therefore, I hope you can cooperate with this plan, as part of the environme-ntal protection activities, when dealing with wastes in peacetime can pay more a-ttention.

1. Unused packaging materials, in order to be recycled again, please send them t-o the local recycling company for disposal.
2. lubricants used shall be properly handled according to relevant laws and regul-ations.
3. When parts need to be replaced in product maintenance or repair, there are un-necessary circuit boards and electronic parts, and when products are discarded, please treat them as electronic waste.

非常感谢您购买本公司的工业缝纫机
在使用缝纫机之前，请仔细阅读<为了您的安全使用>和使用说明。
工业缝纫机的特性之一，因为要在机针和旋梭等运动零部件附近进行操作，而这些零部件很容易引起受伤的危险，所以请在受过培训的人或熟练人员的安全操作知识的指导下，正确地使用本缝纫机。

为了您的安全使用

[1] 安全使用的标记及其意义

本使用说明书及产品所使用的标记和图案记号是为了您的安全而正确地使用产品，防止您及其他人受到危害和损害。
表示方法及含意如下。

标记

⚠ 危险	该内容表示如果忽视此标记而进行了错误的操作，必将导致死亡或重伤。
⚠ 警告	该内容表示如果忽视此标记而进行了错误的操作，肯定会引起人员死亡或重伤。
⚠ 注意	如果忽视此标记而进行错误的操作，有可能会引起人员受到轻微或中度的伤害。

图案和符号

…… 该符号(△)表示 “应注意事项”。
三角中的图案表示必须要注意的实质内容。
(例如，左边的图案表示 “当心受伤”。)

…… 该符号(⃠)表示“禁止”。

…… 该符号(●)表示“必须”。
圆圈中的图案表示必须要做的事情的实质内容。
(例如，左边的图案表示 “必须接地”。)

Thank you very much for purchasing our industrial sewing machine
Before using the sewing machine, please read <for your safe use> and use inst -ructions carefully
The characteristic of industrial sewing machine is that it should be operated nea −r the moving parts such as needles and spindles, which are easy to cause injur -y, so place use the sewing machine correctly under the guidance of the safety o -peration knowledge of trained or skilled personnel.

For Your Safe Use

[1] Security Usage Markup And Its Significance

The labels and pattern marks used in this instructions and products are for your safety and correct use of the products to prevent you and others from bei -ng harmed and damaged.
The methods and implications are as follows.

Sign

⚠ Danger	This content indicates that if this mark is mishandled, it will cause death to become serious.
⚠ Warning	This content indicates that if this mark is mishandled, people will die or be seriously injured.
⚠ Note	That if this mark is mishandled, it may cause minor or moderate injurys.

Patterns And Symbols

The symbol (△) indicates “points for attention”.
The pattern in the triangle represents the essential content that mus -t be paid attention to.
(For example, the pattern on the left shows “watch out for injuries”.)

The symbol (⃠) indicates “prohibition”.

The symbol (●)indicates “must”.
The pattern in the circle indicates the substance of what must be do -ne.
(For example, the pattern on the left shows “must be grounded”.)

[2] 安全注意事项

⚠危险

在关闭电源开关并将电源插头从插座上拔下后，至少等待5分钟，再打开控制箱盖。触摸带有高电压的区域将会造成人员伤亡。

⚠警告

缝纫机内不允许进入任何液体，否则会引起火灾、电击或操作故障。
如果缝纫机内(机头或控制箱)进入任何液体，请立即关闭电源，并将电源插头从插座上拔出，然后联系销售商或资深技术人员。

⚠注意

使 用 环 境

请不要在有电源线干扰及静电干扰等有强电气干扰源影响的环境下使用。
强电气干扰源可能会影响缝纫机的正确操作。

电源电压的波动应该在额定电压的±10% 以内的环境下使用。
电压大幅度的波动会影响缝纫机的正确操作。

电源容量应大于缝纫机的消耗电量。电源容量不足会影响缝纫机的正确操作。

环境温度应在5℃-35℃ 的范围内使用。
低温或高温会影响缝纫机的正确操作。

相对湿度应在45%-85%的范围内，并且设备内不会形成结露的环境下使用。干燥或多湿的环境和结露会影响缝纫机的正确操作。

万一发生雷电暴风雨时，关闭电源开关，并将电源插头从插座上拔下。雷电可能会影响缝纫机的正确操作。

请勿将USB存储器以外的设备连接到USB连接端口上。否则有可能导致故障。

安 装

请让受过培训的技术人员来安装缝纫机。

请委托购买商店或电气专业人员进行电气配线。

缝纫机重约38kg，安装工作必须 两 人以上来完成。

在安装完成前，请不要连接电源，如果误踩下踏脚板时，缝纫机动作会导致受伤。

请在切断电源后，再拔掉电插头。
不然易成为控制箱发生故障的原因。

必须接地。
接驳地线不牢固，是造成触电或误动作的原因。

固定电缆时，不要过度弯曲电缆或用卡钉固定得过紧，会引起火灾或触电的危险。

如果使用带小脚轮的工作台，则应该固定小脚轮，使其不能移动。

缝纫机头倒下时，请一定要固定工作台，不可使其随意移动。
工作台移动易发生脚等被夹住之事故，是导致人身事故的原因。

缝纫机头倒下或竖起时，请用双手进行操作。
单手操作时因缝纫机的重量万一滑落易导致受伤。

使用润滑油和黄油时，务必戴好保护眼镜和保护手套等，以防润滑油落入眼中或沾在皮肤上，这是引起发炎的原因。
另外，润滑油或黄油不能饮用，否则会引起呕吐和腹泻。
将油放在小孩拿不到的地方。

[2] Safety Precautions

⚠ Danger

After closing the power switch and unplugging the power plug from the socket, wait for at least 5 minutes before opening the control box cover. Touching areas with high voltage can cause casualties.

⚠ Warning

No liquid is allowed to enter the sewing machine, otherwise it will cause fire, electric shock and operation failure.

If any liquid enters the sewing machine (head or control box), turn off the power supply immediately, pull the plug out of the socket, and contact the vendor or senior technicians.

⚠ Be Careful

Use Environment

Please don't use in the environment with strong electrical int-erference sources such as power line interference and elec-trostatic interference.
Strong electrical interference sources may affect the correct operation of sewing machines.

The fluctuation of power supply voltage should be used in th-e environment of rated voltage less than ±10%.
The large fluctuation of voltage will affect the correct operati-on of sewing machine.

The power supply capacity should be greater than the powe-r consumption of the sewing machine. Insufficient power su-pply capacity will affect the correct operation of sewing mac-hine.

The ambient temperature should be used in the range of 5-35 degrees Celsius.
Low or high temperature will affect the correct operation of sewing machine.

Relative humidity should be in the range of 45% - 85%, and the equipment will not form condensation environment. Dry or wet environment and dew will affect the correct operation of sewing machine.

In case of thunderstorm, turn off the power switch and pull t-he power plug off the socket. Lightning may affect the corre-ct operation of sewing machine.

Do not connect devices other than USB memory to USB con-nection ports. Otherwise, it may lead to failure.

Install

Ask trained technicians to install sewing machines.

Please commission the purchase shop or electrical professi-onals for electrical wiring.

The sewing machine weighs about 38Kg. Installation must b-e completed by more than two people.

Please do not connect the power supply before the installati-on is completed. If you step on the pedal by mistake, the se-wing machine will cause injury.

Please unplug the plug after cutting off the power supply.
Otherwise, it will easily become the cause of the failure of th-e control box.

It must be grounded.
Insufficient ground connection is the cause of electric shock or misoperation.

When fixing the cable, do not bend the cable excessively or fix it too tightly with clamps, which may cause fire or electric shock.

If a worktable with casters is used, the casters should be fixe-d so that they cannot move.

When the head of the sewing machine falls down, please ma-ke sure that the worktable is fixed and not moved at will.
Accidents such as foot clamping have occurred in the move-ment of worktable, which is the cause of personal accidents.

When the sewing machine head falls down or stands up, ple-ase operate with both hands.
One-handed operation can easily cause injury if the weight o-f the sewing machine slips.

When lubricating oil and butter are used, it is necessary to w-ear protective glasses and gloves to prevent lubricating oil fr-om falling into serious or sticking to the skin, which is the ca-use of inflammation.
In addition, lubricants or butter should not be drunk, otherwis-e vomiting and diarrhea will occur.
Keep oil out of reach of children

⚠注意

缝　纫

本缝纫机仅限于接受过安全操作培训的人员使用。

本缝纫机不能用于除缝纫外的任何其他用途。

使用缝纫机时必须戴上保护眼镜。
如果不戴保护眼镜，断针时就会有危险，机针的折断部分可能会弹入眼睛并造成伤害。

发生下列情况时，请切断电源。
否则误踩下踏脚板时，缝纫机动作会导致受伤。
・机针穿线时
・更换机针或梭芯时
・缝纫机不使用，或人离开缝纫机时

如果使用带小脚轮的工作台，则应该固定小脚轮，使其不能移动。

为了安全起见，在使用本缝纫机之前，请安装保护装置。如果未安装这些安全装置就使用缝纫机，会造成人身伤害及缝纫机损坏。

缝纫过程中，不要触摸任何运动部件或将物件靠在运动部件上，因为这会导致人员受伤或缝纫机损坏。

缝纫机头倒下时，请一定要固定工作台，不可使其随意移动。
工作台移动易发生脚等被夹住之事故，是导致人身事故的原因。

缝纫机头倒下或竖起时，请用双手进行操作。
单手操作时因缝纫机的重量万一滑落易导致受伤。

如果缝纫机操作中发生误动作，或听到异常的噪音或闻到异常的气味，应立即切断电源。然后请与购买商店或受过培训的技术人员联系。

如果缝纫机出现故障，请与购买商店或受过培训的技术人员联系。

清　洁

在开始清洁作业前，请切断电源。
如果误踩下踏脚板时，缝纫机动作会导致人员受伤。

缝纫机头倒下时，请一定要固定工作台，不可使其随意移动。
工作台移动易发生脚等被夹住之事故，是导致人身事故的原因。

缝纫机头倒下或竖起时，请用双手进行操作。
单手操作时因缝纫机的重量万一滑落易导致受伤。

使用润滑油和黄油时，务必戴好保护眼镜和保护手套等，以防润滑油落入眼中或沾在皮肤上，这是引起发炎的原因。
另外，润滑油或黄油不能饮用，否则会引起呕吐和腹泻。
将油放在小孩拿不到的地方。

保 养 和 检 查

只有经过训练的技术人员才能进行缝纫机的维修, 保养和检查。

与电气有关的维修、保养和检查请委托购买商店或电气专业人员进行。

发生下列情况时,请关闭电源。并从电源插座上拔下插头。
否则误踩下踏脚板时，缝纫机动作会导致受伤。
・检查、调整和维修
・更换旋梭，切刀等易损零部件

打开马达罩盖前，务必先关闭电源，等待一分钟后，再执行操作。
触摸马达表面可能会导致烫伤。

在必须接上电源开关进行调整时，请务必切换到保养模式。
务必十分小心遵守所有的安全注意事项。

缝纫机头倒下时，请一定要固定工作台，不可使其随意移动。
工作台移动易发生脚等被夹住之事故，是导致人身事故的原因。

缝纫机头倒下或竖起时，请用双手进行操作。
单手操作时因缝纫机的重量万一滑落易导致受伤。

更换零件或安装可选附件时，请务必仅使用正品零件。
本公司将不承担　使用非正品零件而造成的任何事故或故障责任。

取下的安全保护装置，再次安装时，请务必安装在原位上, 并检查能否正常的发挥作用。

为了防止发生事故及故障，请勿擅自改造本缝纫机。
本公司将不承担 改 造本缝纫机而造成的任何事故或故障责任。

⚠ Be careful

Sewing

This sewing machine is only used by persons trained in safe operation.

This sewing machine cannot be used for any purpose other than sewing.

Protective glasses must be worn when sewing machines are used.

If you don't wear protective glasses, there will be danger whe -n you break the needle. The broken part of the needle may p -op into your eyes and cause injury.

When the following happens, please cut off the power supply. Otherwise, when you step on the pedal, the sewing machine will cause injury.

- When the needle goes through the thread
- When changing needle or shuttle core
- When a sewing machine is not in use or when a person leav -es the sewing machine

If a worktable with casters is used, the casters should be fixe -d so that they cannot move.

For the sake of completeness, please install protective device before using this sewing machine. If these safety devices are not installed, use sewing opportunities to cause personal injur -y and sewing machine damage.

During the sewing process, do not touch any moving parts o -r place the objects on the moving parts, because this will ca -use injuries to people or damage to the sewing machine.

When the head of the sewing machine falls down, please ma -ke sure that the worktable is fixed and not moved at will. Accidents such as foot clamping have occurred in the move -ment of worktable, which is the cause of personal accidents.

When the sewing machine head falls down or stands up, ple -ase operate with both hands.
One-handed operation can easily cause injury if the weight o -f the sewing machine slips.

If the sewing machine operates incorrectly, or hears abnorm -al noise or smells abnormal odor, the power supply should b e cut off immediately. Then contact the shop or trained techn -icians.

If the sewing machine breaks down, please contact the shop or trained technicians.

Clean

Please cut off the power supply before starting the cleaning operation.
If you step on the pedal by mistake, the sewing machine will cause injury.

When the head of the sewing machine falls down, please ma -ke sure that the worktable is fixed and not moved at will. Accidents such as foot clamping have occurred in the move -ment of worktable, which is the cause of personal accidents.

When the sewing machine head falls down or stands up, ple -ase operate with both hands.
One-handed operation can easily cause injury if the weight o -f the sewing machine slips.

When lubricating oil and butter are used, it is necessary to w -ear protective glasses and gloves to prevent lubricating oil fr -om falling into serious or sticking to the skin, which is the ca -use of inflammation.
In addition, lubricants or butter should not be drunk, otherwis -e vomiting and diarrhea will occur.
Keep oil out of reach of children

Maintenance And Inspection

Only trained technicians can repair, maintain and inspect se -wing machines.

Maintenance, maintenance and inspection related to electric -ity should be entrusted to purchasing shops or electrical pro -fessionals.

Turn off the power supply when the following happens. Pull t -he plug from the power outlet.
Otherwise, when you step on the pedal, the sewing machine will cause injury.

- Inspection, adjustment and maintenance
- Replacement of fragile parts such as spindle and cutter

Before opening the motor cover, be sure to turn off the powe -r supply, wait a minute, and then perform the operation.
Touching the motor surface can cause burns.

When the power switch must be connected to adjust, be sur -e to switch to maintenance mode.
Be careful to observe all safety precautions

When the head of the sewing machine falls down, please ma -ke sure that the worktable is fixed and not moved at will. Accidents such as foot clamping have occurred in the move -ment of worktable, which is the cause of personal accidents.

When the sewing machine head falls down or stands up, ple -ase operate with both hands.
One-handed operation can easily cause injury if the weight o -f the sewing machine slips.

When replacing parts or installing optional accessories, be s -ure to use only genuine parts.
The Company will not be liable for any accident or malfuncti -on caused by the use of non-authentic parts.

When removing the safety protection device and installing it again, be sure to install it in situ and check whether it can wo -rk properly.

In order to prevent accidents and malfunctions, please do no -t alter the sewing machine without authorization.
The Company will not be liable for any accident or malfunctio -n caused by the modification of the sewing machine.

[2] 警告标签

缝纫机上有下列警告标签。
当使用缝纫机时，请遵守标签上的说明。如果标签脱落或模糊不清，请和购买商店联系。

1

2

小心避免因移动挑线杆造成
损伤。

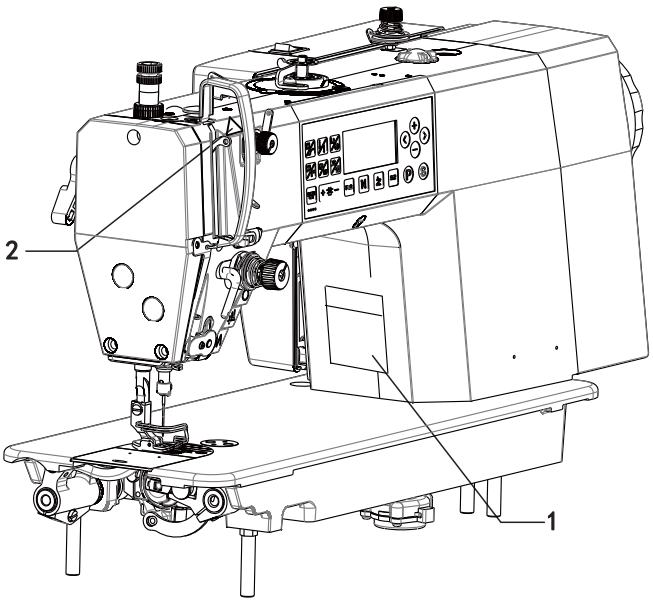

[2] Warning Label

The following warning labels are on the sewing machine
When using the sewing machine, please follow the instructions on the label. If the label falls off or is ambigu
-ous, please contact the purchase shop.

1

2

Be careful not to damage by mo
-ving the thread take-up lever .

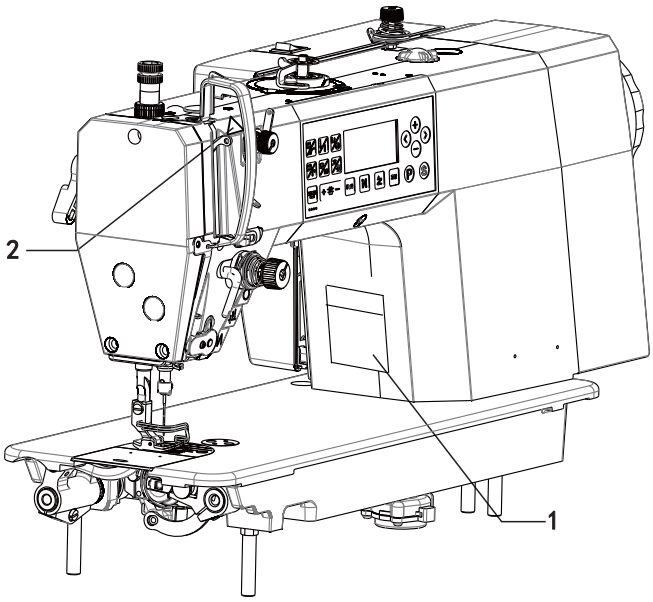

目　　录
CONTENTS

使用说明
Operation Instruction

1 开车前的注意事项 Precautions Prior to Startup 3

2 使用注意事项 Precautions for Use 3

3 主要技术规格 Main Techanical Specifications 4

4 机器的安装 Mounting the Machine 5

5 机器的加油 Lubrication of machine 6

6 线架的安装 Mounting the Thread Stand 6

7 机针的装法 Mounting the Needle 7

8 梭芯的装法 Mounting the Bobbin 7

9 梭芯套的装法 Installation of bobbin case 8

10 底线的卷绕 Winding up the Bobbin Thread 8

11 面线的穿法 Threading the Needle Thread 10

12 关于压脚提升 Lifting of presser foot 10

13 手触倒缝装置的用法 Hand-touch Backstitch Device 11

14 踏板的操作 Operating the Treadle 11

15 踏板的调整 Adjusting the Treadle 12

16 旋梭油量调节
Oil mass Adjustment of Rotating Hook 12
17 压脚压力的调节
Adjusting the Presser Foot Pressure 13
18 压脚高度和角度的调节
Adjusting the height and angle of presser foot 15
19 膝动提升压脚高度的调节
Adjustment of The Knee Lift Height 16
20 缝线张力的调节
Adjusting the Tension of Stitch Thread 17
21 剪线后面线长度的调节
Adjustment of the Upper Thread Length after Trimming 18
22 挑线杆挑线量的调节
Adjusting the Take-up Amount of Take-up Lever 18
23 挑线弹簧的调节
Adjusting the Take-up Spring 19
24 针杆高度的调节
Adjust the Height of the Needle Bar 19
25 机针和旋梭同步的调节
Adjust the Synchronization of the needle and hook 20
26 机针和送料同步的调节
Adjust the Synchronization of the Needle and Feed 22
27 送料牙高度的调节
Adjustment of the Height of feed dog 22
28 送料牙倾斜的调节
Adjust the lean of feed dog 23
29 定刀和动刀的更换
Replacing the fixed knife and movable knife 24
30 剪线装置的调节
Adjusting the Thread-trimming Device 25
31 保养
Maintenance 26
32 缝纫机的搬运及放置注意事项
Carrying and Placing of the Sewing Machine 28

1 开车前的注意事项
Precautions Prior to Startup

1. 机头装箱前为了防止机件生锈,在部分均涂有较厚的防锈油脂,同时机头装箱后,还可能可能在较长的贮藏和长途运输阶段造成油脂硬化和在机器表面积聚灰尘,所以必须将表面的油脂和灰尘用汽油和洁净的软布擦拭干净。

2. 机器出厂时，虽经过周密的检查和试验，但在长途运输中也可能受到强烈的震动使机件松动或歪曲，所以应该做一次周密的检查，并用手转动上轮，看机件之间有无转动困难、碰撞现象或其它不均匀的阻力，不正常的声响，如有应作适当的调整，机器状态正常后才可正　试车。

3. 油盒内机油液面高度没有在正常范围内绝不能开车。

4. 机器运转时，上轮转向应该是逆时针方向（从上轮外侧面看）。

5. 确认电控铭牌上所标电压及相位是否正确。

6. 生产日期见合格证。

1. The machine head is coated with a thick layer of rust-prevention grease before encasement, and the encased machine head may possibly be subjected to grease hardening and dust buildup on the machine surface in process of long storage and long-haul traffic; therefore, take care to remove the grease and dust from the surface using soft cloth and gasoline.

2. Though the machine was inspected and tested with care before factory leaving, it might be affected by violent vibration resulting in looseness or distortion of the machine parts; therefore the operator shall thoroughly check the machine, turn the upper wheel by hand and check it for difficulty in free rotation, slight impact, and other uneven resisting force or abnormal noises, and make appropriate adjustment if any to restore the machine state before formal trial run.

3. Never start up the machine if the oil liquid level in the oil box falls outside the normal range.

4. The upper wheel shall rotate counterclockwise (when it is viewed from the lateral surface of the upper wheel) when the machine is operating.

5. Check whether the voltage and phases indicated on the electric-control data plate are correct.

6. The date of manufacture is indicated on the certificate of conformity.

2 使用注意事项
Precautions for Use

1. 当接通电源或机器运转时，请勿将手与机针接触。
2. 机器运转时,请勿将手指伸入挑线杆防护罩内。
3. 操作者用手送料时,请勿将手指伸入护针架。
4. 机头翻动及拆手盖时,一定要切断电源。

5. 操作者离开机器时,必须切断电源。
6. 机器运转时,绝不允许头或手以及任何东西靠近上轮、绕线器。
7. 只有在停机时，才能装卸防护罩或其它保护装置。
8. 不能用香蕉水等油漆稀释剂擦拭机头表面。

1. Never touch the needle by hand when the machine is powered on or while it is operating.
2. Never put your finger into the protection cover of take-up lever during operation of the machine.
3. The operator must not put his finger into the needle guard bracket when he feeds the sewing materials by hand.
4. Operator must trim off the electricity supply before he turns over the machine head or removes the hand cover.
5. The operator must trim off the electricity supply before he gets away from the machine.
6. Prohibit the head, hands and anything to approach the upper wheel and bobbin winder while the machine is operating.
7. Never remove or mount the protection cover or other protection devices before the machine is stopped.
8.Never wipe up the surface of machine head using paint thinner such as acetone.

3 主要技术规格 Main Techanical Specifications

规　格		参数
缝　料		中厚料
最高缝速		5000针/分
最大针距		5-7毫米
机　针		DB×1/DP×5 9#　～22#
压脚提升高度	手 控	5.5毫米(最大)
	膝 控	13毫米(最大)
润滑系统		自动
润 滑 油		10号白油
电机功率		220伏/550瓦

Specification		Parmeter
Application		For medium-weight materials
Max sewing speed		5000sti/min
Max stitch length		5-7mm
Needle		DB×1/DP×5 9#　～22#
Presser foot lift height	Hand lifter	5.5mm(Max)
	Knee lifter	13mm(Max)
Lubricating system		Auto
Lubrication oil		10# White oil
Motor power		220V/550W

4 机器的安装 (图1、图2、图3、图4、图5)
Mounting the Machine (Fig.1, Fig. 2, Fig.3, Fig.4 and Fig. 5)

1.油盘的安装

1）油盘②应放置在台板上的凹槽四角上。

2）将两只机头座垫①安装在油盘②的A边（朝操作者一边），将两只油盘支座③安装在油盘②的B边（机头连接钩接合一边），然后放上油盘②。

3）将机头连接钩⑤插入底板销孔内，与台板的机头连接钩座④相嵌合再把机头放到油盘四只角的机头座垫上。

4）如图所示将机头支柱⑥牢牢地插入台板中。

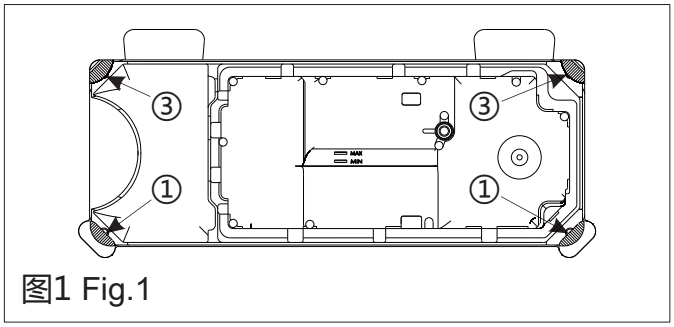

图1 Fig.1

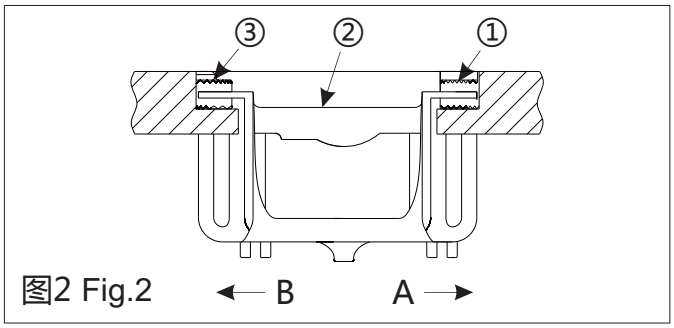

图2 Fig.2

1.Fixing oil tray

1) Put the oil tray ② on the four groove co-rners on the sewing table.

2) Fix two arm cushion ① to the A side of oil tray ② (facing the operator).Fix the two stand bases ③ to the B side of oil tray ② (hin-ge side),then fix the oil tray ②.

3) Insert machine head coupling hook ⑤ into the pin holes in the bottom plate such th-at it is embedded into the coupling hook se-at ④, and put the machine head onto the se-ating washer on four corners of the oil tray.

4) As shown in the picture,insert head sup-port ⑥ into the machine table firmly.

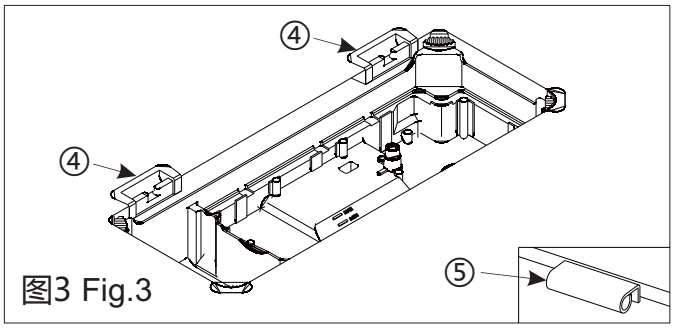

图3 Fig.3

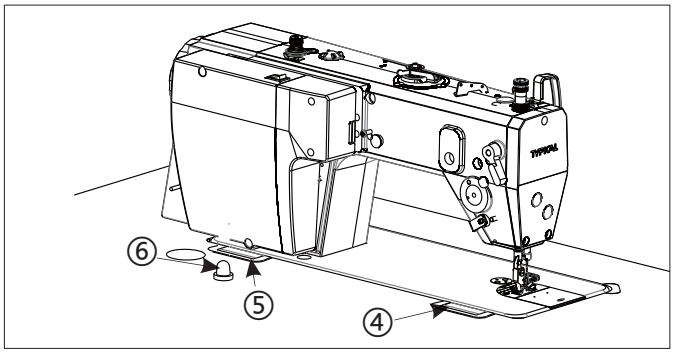

图4 Fig.4

5 机器的加油(图6)
Lubrication of machine(Fig.6)

1.润滑须知

1）向油盘①注入缝纫机油（10号白油）至“MAX”记号部A。

2）当油面低于MIN记号B时，应再加油。

3）加油后，开动机器，应看到油液飞溅到油窗②上，说明润滑正常。

4）至于飞溅的油量多少与总润滑油量多少无关。

注意:

1.为了防止缝纫机的意外启动，请关掉电源之后再进行操作。

1.Information on lubrication

1) Fill oil pan ① with sewing machine oil (10 while oil)up to MAX mark A.

2)When the oil level lowers below MIN ma-rk B, refill the oil pan with the specified oil.

3)When you operate the machine after lubri-cation, you will see splashing oil through oil sight window ② if the lubrication is adequate.

4)Note that the amount of the splash oil is u-nrelated to the amount of the lubricating oil.

Caution:

1.To prevent the unexpected startup of sewing machine, trim off the pow er supply before the operation is co-nducted.

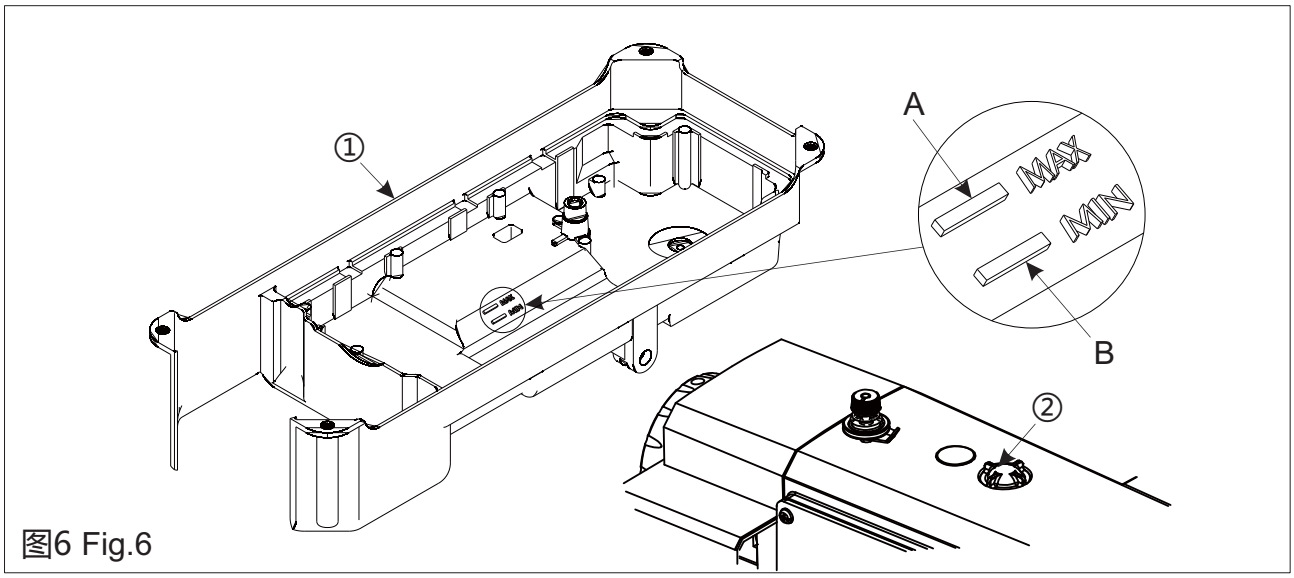

图6 Fig.6

6 线架的安装(图7)
Mounting the Thread Stand (Fig.7)

1.如右图所示那样将线架部件安装到缝纫机台板线架安装孔上。

2.旋紧线架杆下节固定螺母①固定线架。

1.As shown in right-hand figure, mount the thread stand component onto the mounting h-ole for thread stand on the sewing machine t-able.

2.Screw down retaining nut ① for lower se-gment of thread stand lever to fix the thread stand.

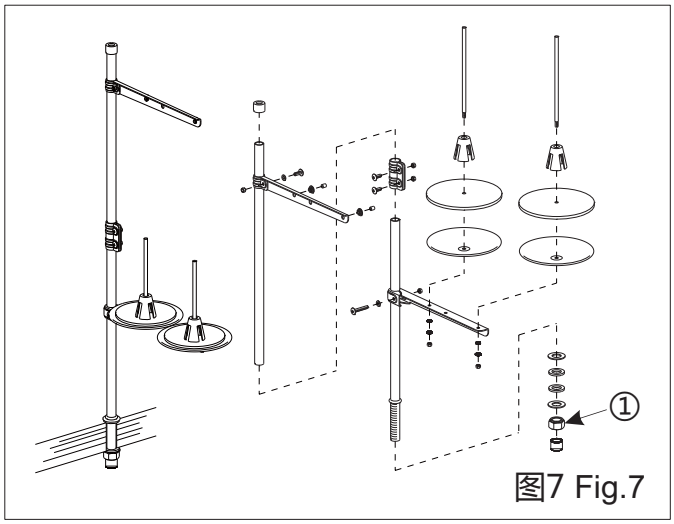

图7 Fig.7

7 机针的装法 (图8)
Mounting the Needle (Fig.8)

1.转动上轮使机针上升到最高处。

2.拧松支针螺钉②，手拿机针①将机针的凹弧部分A正对右方向B。

3.将机针朝箭头方向插入针孔的底部，直至插不进为止。

4.拧紧支针螺钉②。

5.务必使机针的长槽C正对左方向D。

注意:

1.为了防止缝纫机的意外启动，请关掉电源之后再进行操作。

2.机针有各种编号，请根据所用线的粗细和缝料来选择适当的机针。

8 梭芯的装法 (图9)
Mounting the Bobbin (Fig. 9)

1.拿住梭子，将梭芯装入梭子内。

2.将线从梭子上的线槽A中穿过，朝C方向拉出。这样，线通过夹线簧从孔B处引出。

3.拉底线时，梭芯应按箭头方向顺时针转动。

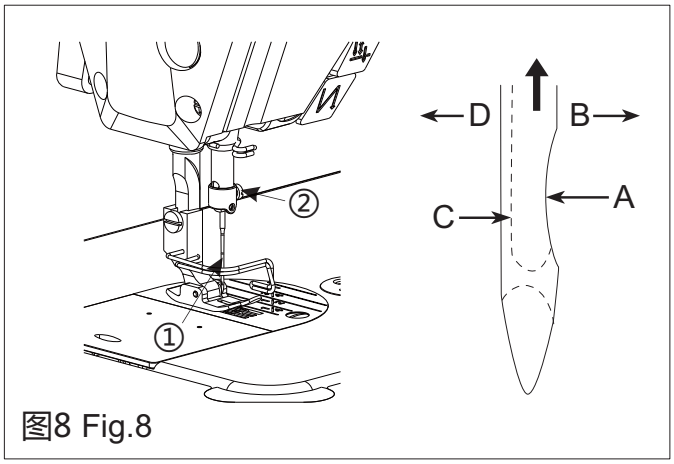

图8 Fig.8

1.Turn the upper wheel to allow the needle to reach its maximum height.

2.Unscrew needle carrying screw ②, hold n-eedle ① by hand, and align the indentation A of needle to right direction B.

3.Insert the needle into the bottom of needl-e hole in direction of arrow till it reaches the e-nd point.

4.Screw down the needle carrying screw ②.

5.Take care to ensure that the elongated sl-ot C on the needle is aligned to the left directi-on D.

Caution:

1.To prevent the unexpected startup of sewing machine, trim off the pow-er supply before the operation is co-nducted.

2.Needles are available in different sizes. Please select appropriate ne-edle as per the thickness of threads and the sewing materials.

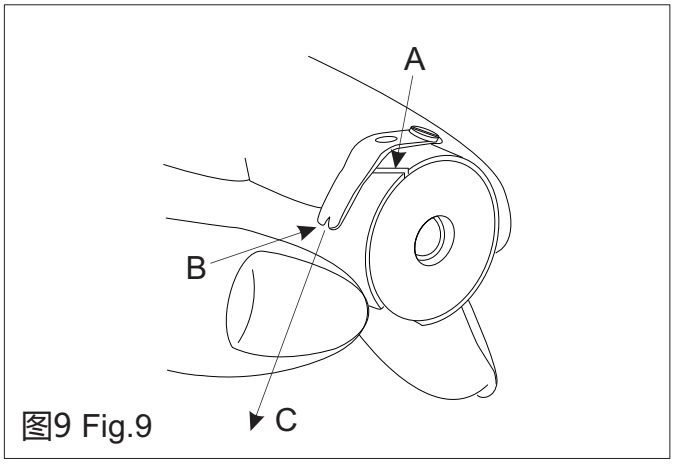

图9 Fig.9

1.Hold the rotating hook by hand, and fit t-he bobbin into the rotating hook.

2.Thread the thread through the thread gro-ove A in the rotating hook, and draw out the t-hread in direction C. In this way, the thread is led out of hole B through the tension spring.

3.When bobbin thread is drawn, the bobbin shall turn clockwise in direction of arrow.

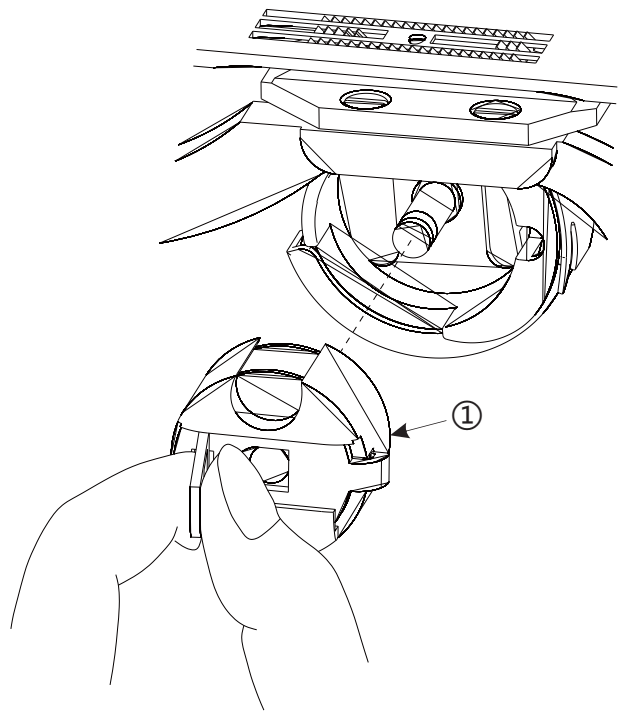

图10 Fig.10

9 梭芯套的装法 (图10)
Installation of bobbin case (Fig. 10)

1.转动手轮将机针升起，直至其处于针板上方。

2.用手拿住梭芯套①(装好梭芯)，将梭芯套装入旋梭中。

注意:

1.为了防止缝纫机的意外启动，请关掉电源之后再进行操作。

1.Turn the machine pulley to raise the needle until it is above the needle plate.

2.Hold the bobbin case ① (with bobbin) with one hand, then install the bobbin case into the hook.

Caution:

1.To prevent the unexpected startup of sewing machine, trim off the power supply before the operation is conducted.

10 底线的卷绕 (图11、图12)
Winding up the Bobbin Thread (Fig. 11, Fig. 12)

1.底线卷绕的方法

1）把梭芯①装到绕线轴②上。

2）把线架右侧的卷线如右图所示穿线，并把线端向右缠绕梭芯数圈。

3）把卷绕手柄③推到A方向，然后运转缝纫机。梭芯①向C方向转动，线卷绕到梭芯①上。卷绕线满后卷绕手柄③自动向B方向弹开并停止卷绕。

4）取下梭芯①，用绕线切刀④切断线。

1.Bobbin thread winding-up method

1) Fit bobbin ① onto spool ②.

2) Thread the right-hand thread coiling on thread stand as shown in right-hand figure,a-nd reel the thread end rightwards onto the b-obbin for several turns.

3) Push winding lever ③ over to direction A, and run the sewing machine. Bobbin ① is rotated in direction C, and thread is reeled o-nto bobbin ①. Once the reel is full, winding lever ③ is pushed toward direction B, and wi-nding is over.

4) Remove bobbin ①, and trim off the thre-ad using winding trimmer ④.

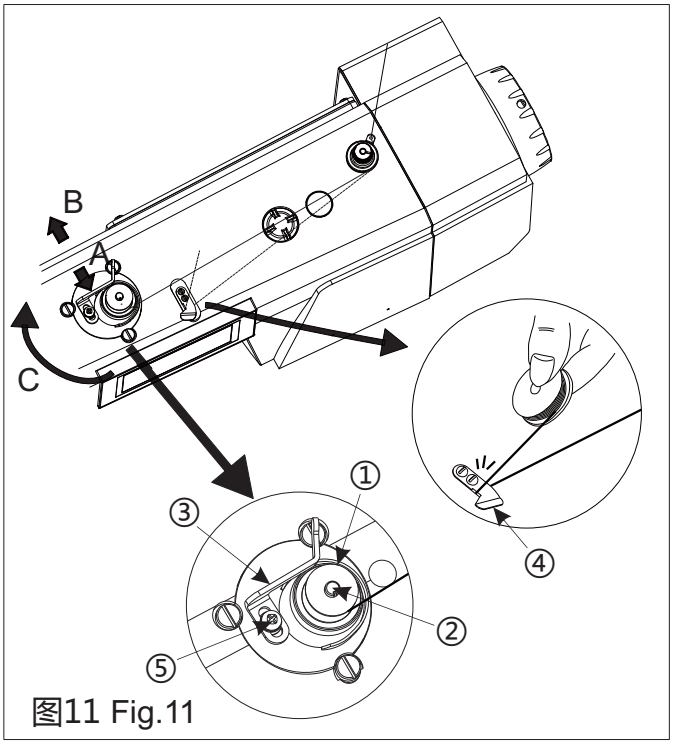

图11 Fig.11

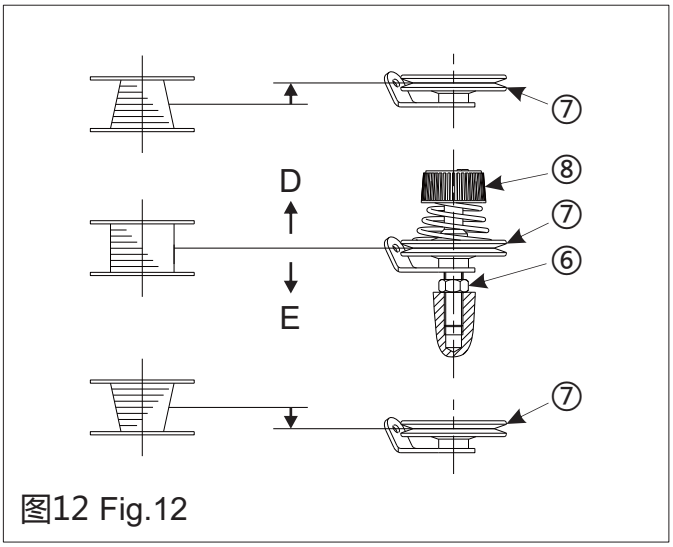

图12 Fig.12

注意:

1.不进行缝制时给梭芯①绕底线时，请把面线从挑线杆孔上抽出来，把梭芯①从旋梭里卸下来后再进行。

2.为了防止发生安全事故，在底线卷绕的过程中，不要碰触任何运动部件或将物件靠在运动部件上。

Caution:

1.To reel bobbin thread onto bobbin ① when no sewing is performed, dra-w the needle thread out of hole in th-e take-up lever, remove bobbin ① o-ut of rotating hook.

2.Do not touch or lean anything to an-y running components when rolling the bottom line,in order to avoid the safety accident.

2.底线卷绕的调节

1）调整底线卷线量时，请拧松固定螺钉⑤，把卷线拨杆③移动到A方向或B方向，然后再固定螺钉⑤。A方向卷线量变少，B方向卷线量变多。(注意：卷绕在梭芯上的底线量最多应为梭芯容量的80%)

2）如果线不能平绕梭芯时，请拧松螺母⑥，转动绕线夹线器，调整夹线板⑦的高度：

a.旋梭①中心和夹线板⑦中心高度一样时为标准位置。

b.下部卷的多时，向如右图D方向移动绕线夹线器的位置，上部卷的多时，向如右图E方向移动绕线夹线器的位置。

c.调整绕线夹线器到合适位置后，把固定螺钉⑥拧紧。

1.Adjusting the bobbin thread winding

1)To adjust the winding capacity of bobbin thread, unscrew fixing screw ⑤, set winding lever ③ in direction A or direction B, and fix s-crew ⑤ again. Direction A is intended for re-duction, and direction B is intended for incre-ase(Caution:The amount of thread wound o-nto the bobbin should be a maximum of 80% of the bobbin capacity).

2)If thread cannot be wound onto the bob-bin flatly, unscrew nut ⑥, turn the winding te-nsion disco, and adjust the height of height of thread gripper plate ⑦.

a.The standard position is reached onc-e the center heights of rotating hook ① and thread gripper plate ⑦ are identical.

b.If the winding amount on the lower pa-rt is bigger, move the winding tension disco in direction D indicated in the right-hand figu

3）调整底线卷绕张力时，请转动线张力螺母⑧进行调整。

-re. If the winding amount on upper part is bi-gger, move the winding tension disco in dire-ction E indicated in the right-hand figure.

c.When the winding tension disco reach-es its suitable position, screw down fixing s-crew ⑥.

3)Adjust the winding tension of bobbin thr-ead by turning thread tension nut ⑧.

11 面线的穿法 (图13)
Threading the Needle Thread (Fig. 13)

穿面线时应先转动手轮使挑线杆上升到最高位置，然后由线架上引出线头按图示序号顺序进行穿线。

注意:

1.为了防止缝纫机的意外启动，请关掉电源之后再进行操作。

Thread the needle thread when needle bar stays in its highest position, lead out the thre-ad end from the thread stand, and conduct th-reading as per the serial numbers indicated in the figure.

Caution:

1.To prevent the unexpected startup of sewing machine, trim off the pow-er supply before the operation is co-nducted.

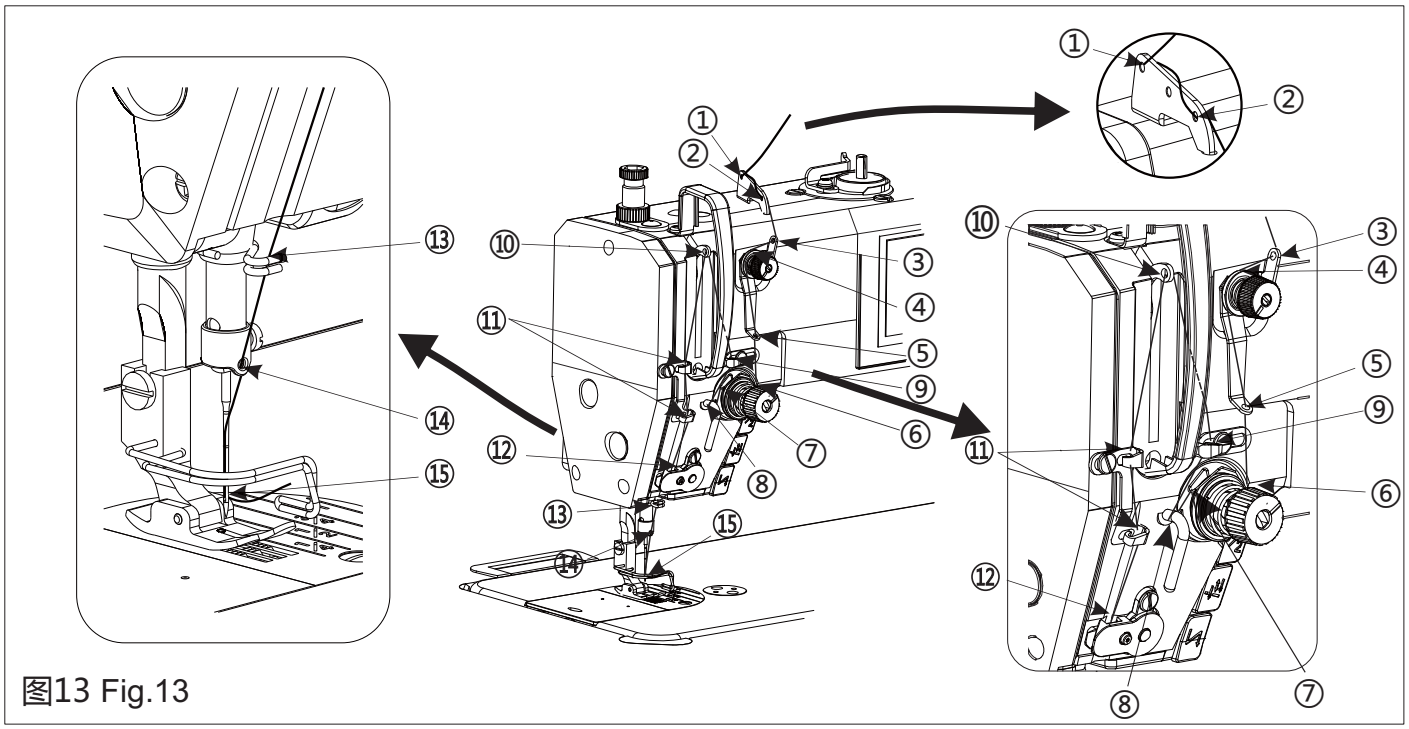

图13 Fig.13

12 关于压脚提升 (图14、图15)
Lifting of presser foot(Fig. 14, Fig. 15)

1.手控提升压脚

1）停车后将压脚扳手①朝A方向转动使压脚抬起(压脚的抬起量约为5.5mm)。

2）当压脚扳手①朝B方向转动时，压脚将放回原来的位置。

1.Lift presser foot controlled by hands

1) Shut down the machine, turn presser foot lever ① in direction A to uplift the presser foot (for about 5.5 mm).

2) When presser foot lever ① is turned in di-rection B, presser foot will be returned to its original position.

2.膝控提升压脚

1）在压下膝控碰块②时，可提升压脚③(压脚提升高度与膝控碰块压下程度有关)。

注意：完全压下膝控碰块时，压脚的标准提升量约为10mm，最大提升量约为13mm。

2）松开膝控碰块②后，提升的压脚③立即放下。

2.Lift presser foot controlled by knees

1) The presser foot ③ can be raised by pres-sing the knee lifter plate ②.(Height of presser lifting is relate to the degree of knees pressing)

Caution: standard and maximal lifting heigh-t of presser foot are respectively about 10mm and 13mm when pressing knees fully.

2) The lifting presser foot ③ lowers as soon as loosing the knee lifter plate ② release.

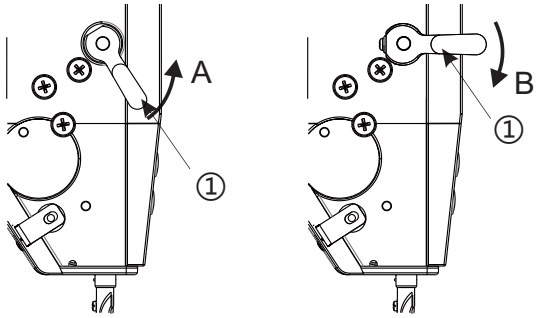

图14 Fig.14

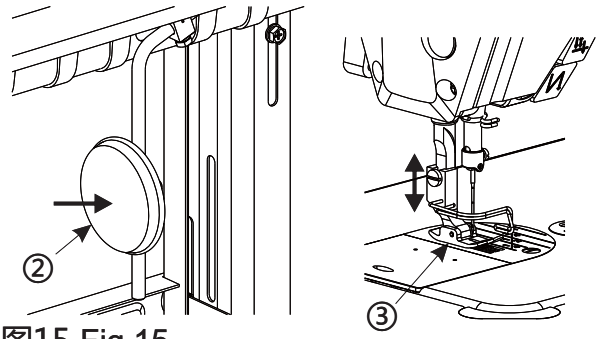

图15 Fig.15

13 手触倒缝装置的用法 (图16)
Hand-touch Backstitch Device(Fig. 16)

1.倒缝按钮的使用方法

1）按下倒缝按钮①，缝纫机立即开始倒缝。

2）仅在按下的时间里进行倒缝。

3）手松开后立即变为正向缝纫。

2.补针按键的使用方法

按一下补针按钮②缝纫机则作往前补半针，一直按着缝纫机则作连续往前补针。

注意：补针按钮②可在连续回缝除外，任何一种车缝中途停止时使用(未切线时)。

3.照明灯控制按钮的使用方法

开机后照明灯会全亮度打开，按动照明灯控制按钮③，灯的亮度会依次减弱，直至关闭，依次循环。

1.Use of back sewing push- button

1) Push the backstitch switching push-butt-on ① to allow the sewing machine to start ba-ckstitch immediately.

2) Backstitch is implemented only while the push-button is held down.

3) It is changed to forward stitch once the pu-sh-button is released.

2.Use of reinforce sewing

Press the reinforce sewing button ② one ti-me, the sewing machine reinforce forth with half stitch, press all the time, it continues sew-ing with forth reinforce.

Caution:in addition to continue back reinfor-ce sewing,the reinforce sewing boutton can be as stop button ② during any sewing condit-ion.(before trimming)

3.Use of the light push- button

The illuminating lamp goes on at full bright-ness once the machine is powered on. Push illuminating lamp control button ③ to reduce in sequence the brightness till turn off.

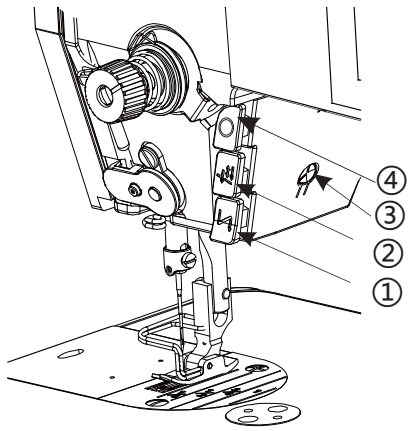

图16 Fig.16

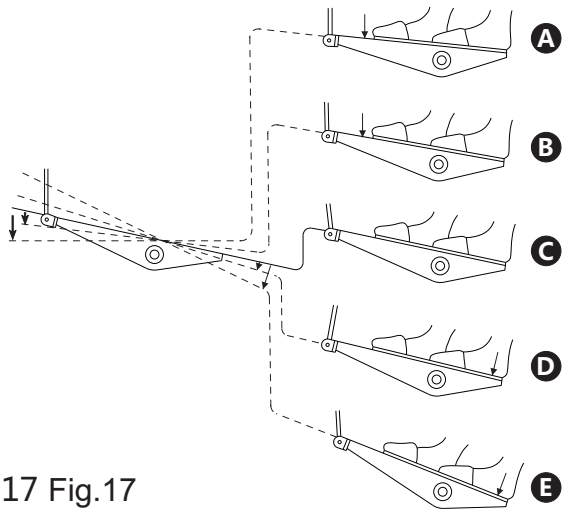

图17 Fig.17

14 踏板的操作 (图17)
Operating the Treadle(Fig. 17)

1.踏板有4级操作：

1）向前轻踩踏板为低速缝纫(图示B)。

2）再用力向前踩踏板则变为高速缝纫(图示A)。

3）当脚不向踏板施力，则踏板回复到原始

1.The treadle has 4 operation levels:

1)The machine runs at low sewing speed w-hen you lightly depress the front part of the p-edal. (as show in the picture B)

2)The machine runs at high sewing speed w-hen you further depress the front part of the p-edal.(as show in the picture A)

3)Penal back to the initial position when sto

状态时，缝纫机停止运转(机针在上停针或下停针位置)(图示C)。

4）再用力向后踩踏板为切线动作(图示E)。

5）使用自动压脚提升装置时，在停止和切线之间增加一级开关D。向后轻踩踏板为压脚提升动作，继续向后强力踩踏板，压脚下降进行切线动作，再次进行压脚提升动作。

-p stepping on it and the machine stop workin -g.(needle in the upper or down position)(as s -how in the picture C)

4)The machine trims threads when you fully depress the back part of the pedal.(as show in the picture A)

5)When the auto-lifer is used,one more ope -rating switch is provided between the sewing machine stop switch and thread trimming swit -ch.The presser foot goes up when you lightly depress the back part of the pedal(D),and if y -ou further depress the back part,the thread tr -immer is actuated.

15 踏板的调整 (图18、图19、图20)
Adjusting the Treadle(Fig. 18, Fig. 19, Fig. 20)

1.踏板角度的调整

1）调节踏板连接杆的长度即可以调节踏板的角度：旋松螺钉①，上下移动上连接杆②和下连接杆③就可以调节踏板连接杆的长度。

2）调节完成后旋紧螺钉①。

注意:

1.为了防止缝纫机的意外启动，请关掉电源之后再进行操作。

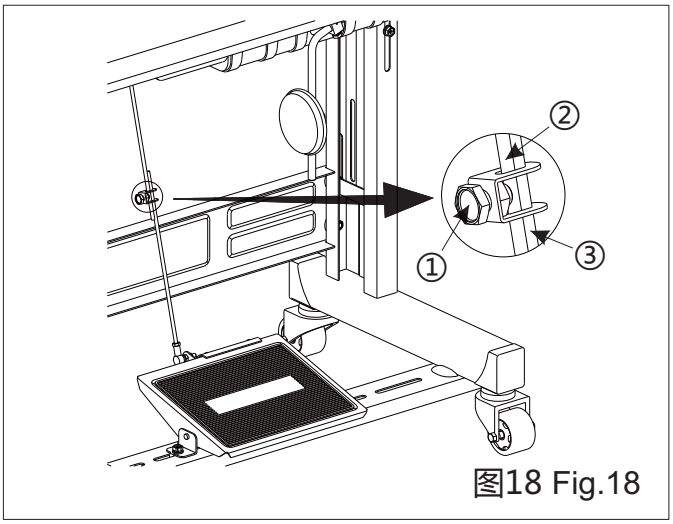

图18 Fig.18

1.Adjusting the angle of treadle

1)Adjust the angle of treadle only by adjusti -ng the length of treadle connecting rod: unsc -rew screw ①, and adjust the length of treadle connecting rod by moving upward/downward the upper connecting rod ② and lower connec -ting rod ③.

2)Screw down screw ① when adjustment is over.

Caution:

1.To prevent the unexpected startup of sewing machine, trim off the pow -er supply before the operation is co -nducted.

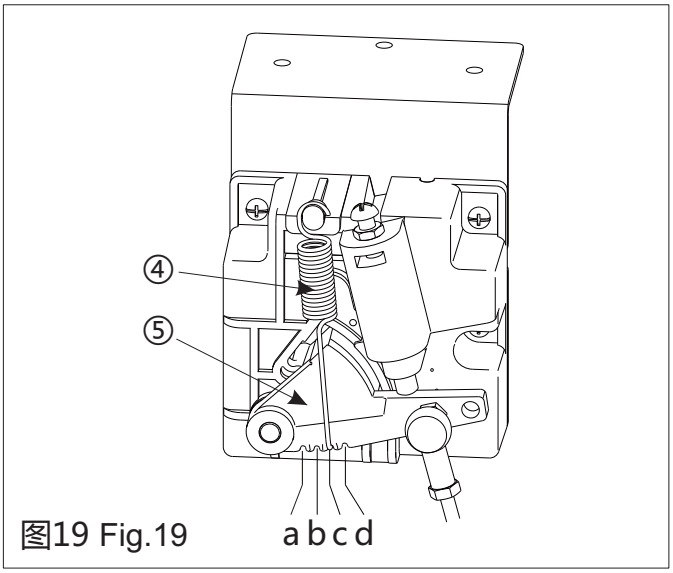

图19 Fig.19

2.踏板踩踏力的调整

将脚放在踏板上并向前轻踩踏板时，缝纫机进行低速缝纫。如感觉踩踏力比较轻时，将踩踏力调节弹簧④挂在踏板旋臂拨杆⑤的位置上进行调节(踩踏力以a为最小，b、c、d依次逐渐增大)。

注意:

1.为了防止缝纫机的意外启动，请关掉电源之后再进行操作。

2.Adjustment of the strength of pedal

The sewing machine run at a low speed wh-en step forth on the panel slightly.If the stren-gth is insufficient, hang the stepping adjust-ment spring ④ on the panel spiral arm drivin-g lever ⑤ in order to adjust strength.(a is the minimum stepping strength ,b,c,d increase g-radually)

Caution:

1.To prevent the unexpected startup of sewing machine, trim off the pow-er supply before the operation is co-nducted.

3.踏板　回力的调整

1）松开螺母⑥，旋转螺　⑦调节踏板　回力: 拧紧螺　⑦则踏板　回力将增大，拧松螺⑦则踏板　回力将减小。

2）调节完踏板　回力后，请拧紧螺母⑥。

注意:

1.为了防止缝纫机的意外启动，请关掉电源之后再进行操作。

3.Adjustment of stepping return strength

1)Loosing nut ⑥ and turn bolt ⑦ to adjust s-tepping return strength : tighten bolt ⑦,the st-rength increases;loosen bolt ⑦,the strength decreases.

2)Tighten nut ⑥ after adjusting stepping ret-urn strength.

Caution:

1.To prevent the unexpected startup of sewing machine, trim off the pow-er supply before the operation is co-nducted.

4.踏板行程的调节

1）拆下螺母⑧。

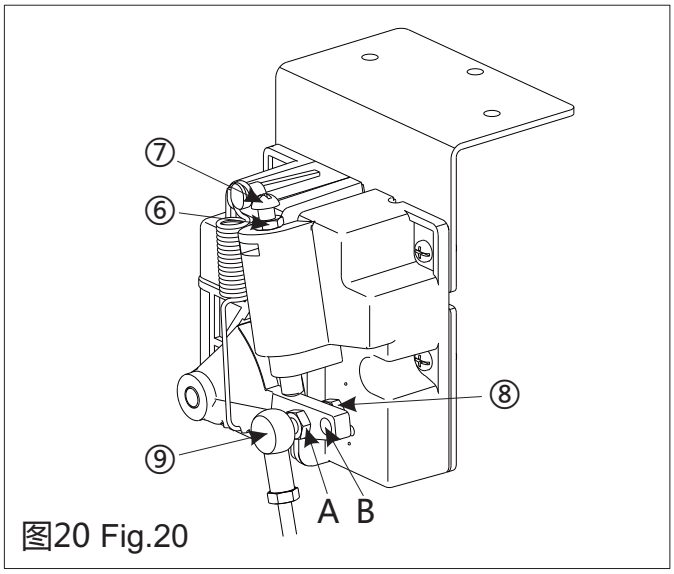

图20 Fig.20

2）将连杆接头⑨从A的位置移动到B的位置，则踏板的行程变为原来行程的约1.3倍，反之则踏板的行程变为原来行程的约0.8倍。

3）调整完行程后，请装上螺母⑧。

注意:

1.为了防止缝纫机的意外启动，请关掉电源之后再进行操作。

2.踏板行程调整后，踏板踩踏力和踏板回力均已改变，请按照上述步骤进行重新调整。

4.Adjustment of panel moving distance

1)Remove nut ⑧.

2)Move connecting rod joint ⑨ from A to B, panel moving distance is 1.3times than origin-al one. Move reversely the distance is 0.8 tim-es as original one.

3)Assembly the nut ⑧ after adjusting panel moving distance.

Caution:

1.To prevent the unexpected startup of sewing machine, trim off the pow-er supply before the operation is co-nducted.

2.Stepping strength and stepping re-turn strength both change after adj-usting panel movement,follow the s-teps above to have adjustments ag-ain.

16 旋梭油量调节 (图21、图22、图23)
Oil mass Adjustment of Rotating Hook (Fig. 21, Fig. 22, Fig. 23)

1.调节方法

1）旋梭的油量是用旋梭油量调节螺钉①来调节：拧紧(向右转动)旋梭油量调节螺钉①旋梭油量将增多，拧松(向左转动)旋梭油量将减少，直至获得适当的供油量为止。

2）调节油量后缝纫机在进行约2小时的缝纫后，再次检查以确认供油量。

注意:

1.为了防止缝纫机的意外启动，请关掉电源之后再进行操作。

Caution:

1.To prevent the unexpected startup of sewing machine, trim off the power supply before the operation is co-nducted.

2.油量的确认方法

1）拆去挑线杆至机针上的面线。

2）用抬压脚扳手抬起压脚。

3）以缝纫机实际缝纫时的转速进行约3分钟的空运转(适度的断续运转)。

4）将油量测试纸②插入旋梭③的下面并握住，以缝纫机实际进行缝纫时的转速使缝纫机运转10秒钟。(对油量测试纸②的纸质没有什么特别的要求)

5）确认飞溅到测试纸②上的油量。

注意:

1.进行上述操作时，请卸下推板并确认油盒中是否有油。

2.为了防止发生安全事故，检查旋梭油量时，要充分注意手指不要碰到旋梭和送料机构等运动的零部件。

3.如更换了旋梭或要变更缝纫速度时，请按上述步骤调整旋梭供油量。

1.Adjustment method

1) Adjust the oil mass of rotating hook using adjusting screw ①: Screw down (turn it to the right) adjusting screw ① to raise the oil mass ,or unscrew (turn it to the right) the adjusting screw to lower the oil mass.Amount repeate-dly until the lubrication amount is correct.

2)Check the lubrication amount again after the sewing machine has been used for appr-oximately two hours.

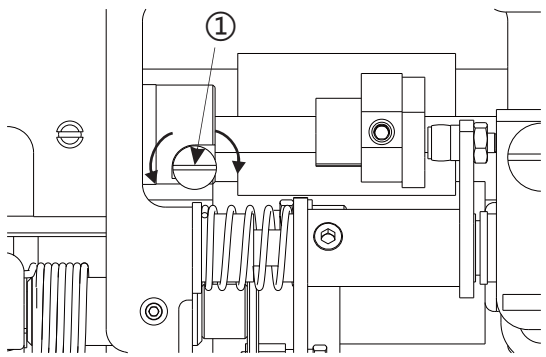

图21 Fig.21

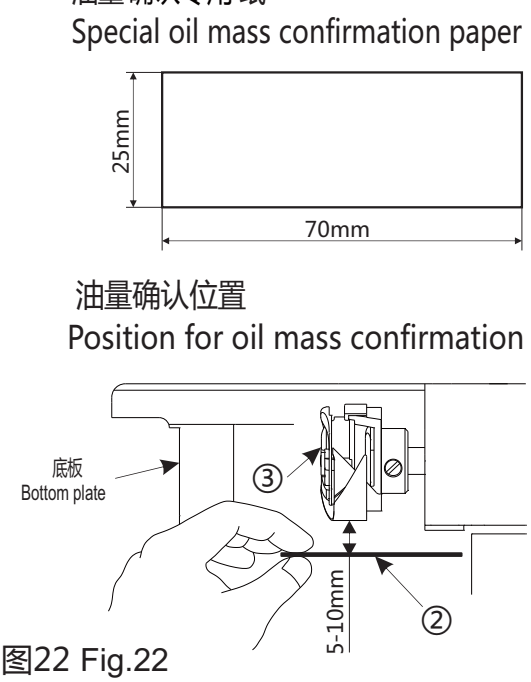

图22 Fig.22

2.Confirming the Oil Mass

1) Remove the thread from all points from the thread take-up to the needle.

2) Use the lifting lever to lift the presser foot.

3) Run the machine at the normal sewing sp-eed for approximately 3 minute without sewi-ng any material (following the same start/sto-p pattern as when actually sewing)

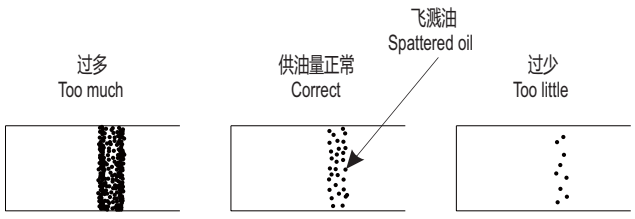

图 23Fig.23

4) Place the lubrication amount check sheet ② underneath the rotary hook ③ and hold it there.Then run the sewing machine at the normal sewing speed for 10 seconds.(Any type of paper can be used as the lubrication amount check sheet ②)

5) Check the amount of oil which has spattered onto the sheet ②.

Caution:

1.Prior to the above-mentioned operation, remove the knockout plate and check whe-ther there is oil in the oil box.

2. Do not use fingers to touch the hook or other running components of feeding mech-anism when checking the amount of oil for the hook to avoid the accident.

3. Use the following procedure to check the amount of oil being supplied to the rotary hook when replacing the rotary hook or when changing the sewing speed.

3.油量适合标样

1）上图标样(见图10)可根据不同的缝纫工序需求进行增或减的微调整，但应注意不要增加或减少过多。油量过少时会引起旋梭发热，油量过多时会污染缝料。

2）用油量测试纸测试3次，直至确认3次油量测试纸油迹均无变化为止。

3.Guide sample of oil mass adequacy

1) The guide sample shown in the right-hand figure(see Fig. 10) may be finely adjusted (increased or reduced) as per different sewing processes; however, excessive increase or reduction shall be avoided. Too little oil mass may lead to rotating hook heating, and over much oil mass may lead to contamination of the sewing materials.

2)Test the oil mass 3 times using special oil mass confirmation paper till the oil traces in-dicated by the special paper show no changes.

17 压脚压力的调节 (图24)
Adjusting the Presser Foot Pressure(Fig. 24)

1.旋松调压螺母②。

2.若将调压螺钉①朝顺时针方向(即A方向)转动时，压脚压力将增强；若朝逆时针方向(即B方向)转动时，压脚压力将减弱。

3.调节完成后旋紧调压螺母②。

1.Unscrew pressure adjusting nut ②.

2.Presser foot pressure is increased if pres-sure adjusting screw ① is turned clockwise (namely in direction A); the pressure is reduce-d if the screw is turned counterclockwise (na-mely in direction B).

3.Screw down pressure adjusting nut ② wh-en adjustment is over.

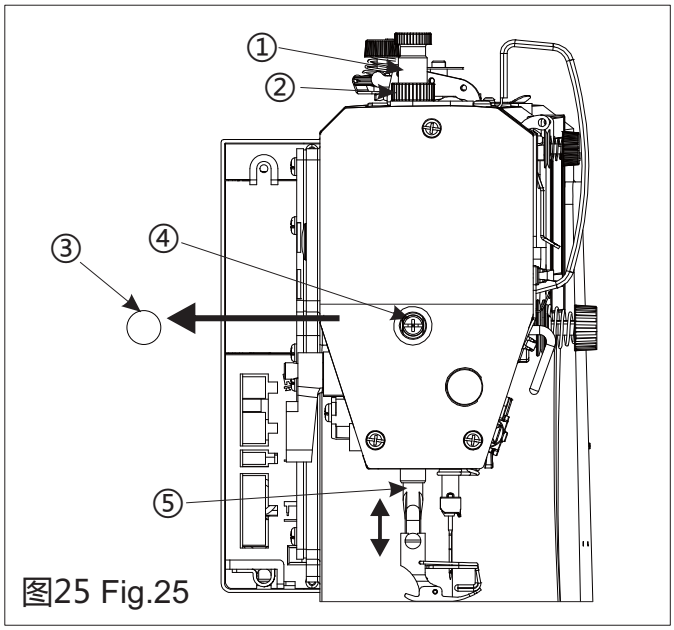

图25 Fig.25

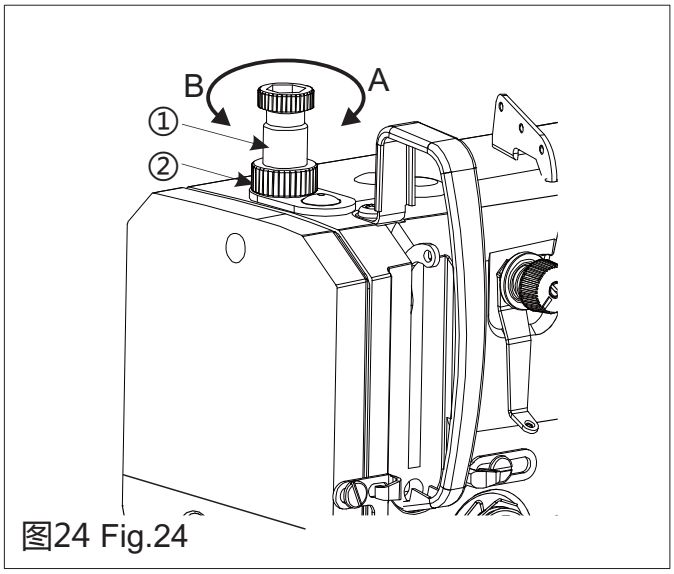

图24 Fig.24

注意:

1.为了防止缝纫机的意外启动，请关掉电源之后再进行操作。

2.对一般布料而言，调压螺钉①的标准高度为32~34毫米，(4.5公斤力)左右。

Caution:

1.To prevent the unexpected startup of sewing machine, trim off the pow-er supply before the operation is co-nducted.

2.For ordinary materials, the standa-rd height of pressure adjusting scre-w ① ranges from 32 to 34mm (4.5 ki-logram force) approximately.

18 压脚高度和角度的调节 (图25)
Adjusting the height and angle of presser foot(Fig. 25)

1.旋松调压螺母②和调压螺钉①，使其对压脚不施加压力。

2.拆下面板上的橡胶塞③。

3.旋松压杆导架紧固螺钉④，上下移动压杆⑤来调节压脚的高度和角度(压脚高度为针板面与压脚底面的距离，手动抬压脚高度的标准值为5.5mm)。

4.调节完成后旋紧压杆导架紧固螺钉④，并装上橡胶塞③。

5.通过调压螺钉①来调节压脚压力，调节后并旋紧调压螺母②。

注意:

1.为了防止缝纫机的意外启动，请关掉电源之后再进行操作。

2.调节完成后回转手轮，确认机针应下

1.Loosen pressure adjusting nut ② and scr-ew ①,free the pressure of presser foot.

2.Open rubber plug ③ in panel.

3.Loosen screw ④ in compression rod guid-e frame, move mobile compression rod ⑤ fro-m up and down to adjust the height and angle of presser foot.(height of presser foot is the di-stance from needle plate surface to the botto-m of it, the standard height of lifting presser f-oot by hand is 5.5mm)

4.Tighten the screw ④ in compression rod guide frame and assembly the rubber plug ③ after adjusting.

5.Adjust pressure of presser foot through p-ressure adjusting screw ①, tighten the nut ② after adjusting.

Caution:

1.To prevent the unexpected startup of sewing machine, trim off the pow-er supply before the operation is co-nducted.

降到压脚槽的正中处。

2.After adjusting,check that the nee -dle moves down into the center of t -he groove in the presser foot.

19 膝动提升压脚高度的调节 (图26)
Adjustment of The Knee Lift Height(Fig. 26)

1.转动手轮使送料牙从针板的上面降到针板的下面。

2.使用压脚扳手将压脚放下。

3.旋松螺母①，旋转螺钉②调节压脚在膝控碰块完全压下时的提升量(完全压下膝控碰块时，压脚的标准提升量约为10mm，最大提升量约为13mm)。

4.调节完成后拧紧螺母①。

注意:

1.为了防止缝纫机的意外启动，请关掉电源之后再进行操作。

1.Turn the machine pulley so that the feed dog is below the top of the needle plate.

2.Lower the presser foot by using the lifting lever.

3.Unscrew the nut ① and rotating the screw ② are the purpose to adjust the height of pres -ser foot when the knee totally pushed to the touch point (by knee, the standard height:10 mm , the maximum height :13mm)

4.Securely tighten the nut ①.

Caution:

1.To prevent the unexpected startup of sewing machine, trim off the pow -er supply before the operation is co -nducted.

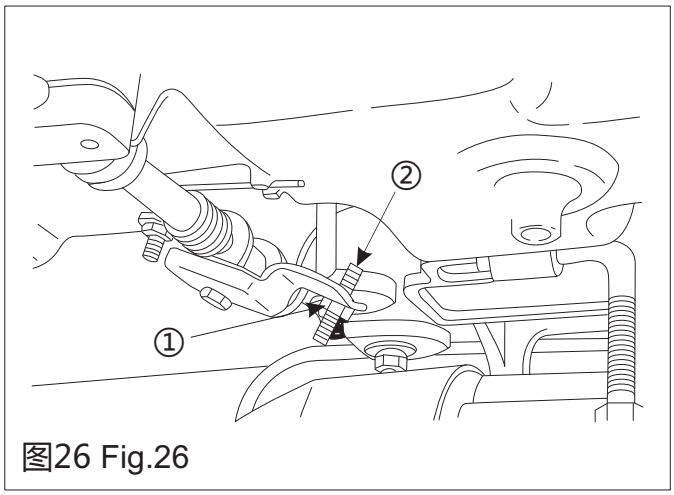

图26 Fig.26

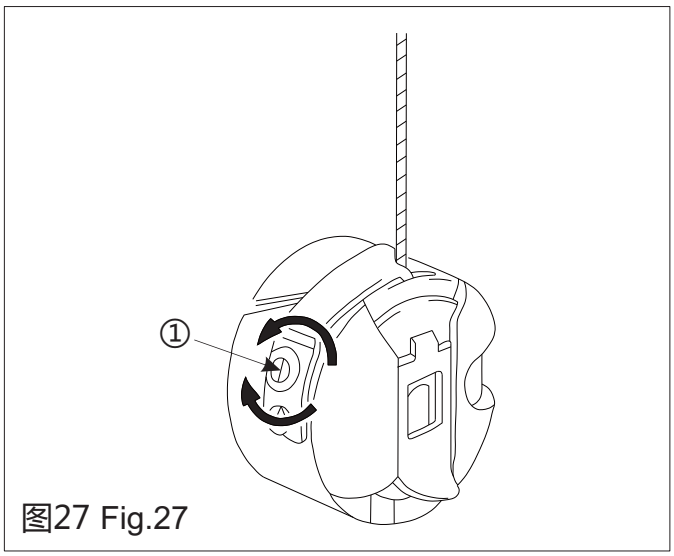

图27 Fig.27

20 缝线张力的调节 (图27、图28)
Adjusting the Tension of Stitch Thread(Fig. 27, Fig. 27)

1.底线张力的调节

拉住从梭芯套中露出的线头，旋转调节螺钉①进行调节：旋紧调节螺钉①则底线张力变大，反之则底线张力变小。

注意：底线张力调节标准：旋转调节螺钉①直至梭芯套以自重慢慢垂落。

1.Adjusting the tension of bobbin thread

Hold the end of a thread which hanging fro -m the bobbin case and use the adjusting rota -ting scerw ① to regulate. The tension of the bottom thread is become strong by tight the s -crew ①, loose the screw to make it weak.

Caution : The adjust standard of the bottom thread tension: Rotating the adjusting screw ① till the bobbin case can falling slowly by it's own weight.

注意:

1.为了防止缝纫机的意外启动，请关掉电源之后再进行操作。

2.面线张力的调节

在底线张力调节之后，调节面线张力以使针脚均匀平整。

1）使用压脚扳手将压脚放下。

2）转动夹线螺母②进行调节：朝顺时针方向(即A方向)转动时，面线张力将增大；朝逆时针方向(即B方向)转动时，面线张力将减小。

Caution:

1.To prevent the unexpected startup of sewing machine, trim off the pow-er supply before the operation is co-nducted.

2.Adjusting the tension of needle thread

After the lower thread tension has been adj-usted,adjust the upper thread tension so that a good,even stitch is obtained.

1)Lower the presser foot by using the lifting lever.

2)Adjust by turning the tension nut ② : The tension of the upper thread will become stron-g when turning toward the clockwise(A), oth-erwise weak when toward anti-clockwise (B).

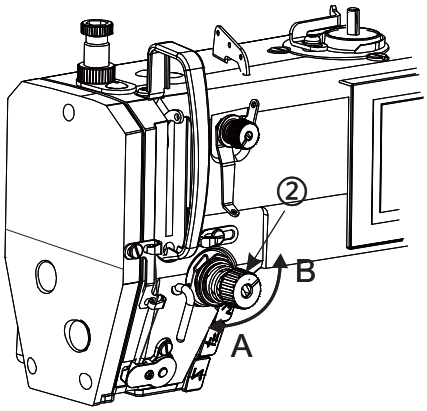

图28 Fig.28

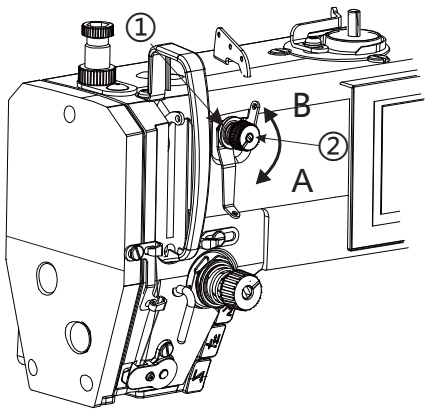

图29 Fig.29

21 剪线后面线长度的调节 (图29)
Adjustment of the Upper Thread Length after Trimming(Fig. 29)

剪线时，线张力松弛，仅用上夹线器①施加张力。如果增加上夹线器①的张力，剪线后残留在针孔处面线长度将会减少，反之减小张力，长度将会增加。

1.转动夹线器①上的调节螺母②进行调节：朝顺时针方向(即A方向)转动时，剪线后残留在针孔处面线长度将会减少,反之朝逆时针方向(即B方向)转动时，长度将会增加（剪线后残留在针孔处面线标准长度：25-30mm）。

At the time of thread trimming,the thread te-nsion is loosened and tension is applied by t-he thread clamp ① only.If added the tension in the thread clamp ①, the upper thread lengt-h that left in the pinhole will be shorter, and v-ice versa.

1.The length of upper thread which left in th-e pinhole will decrease when turning the adju-sting nut ② in the thread clamp ① towards th-e clockwise (A), otherwise it will increase wh-en turn toward anti-clockwise (B). (The stan-dard length of the upper thread which left in t-he pinhole is 25~30mm)

22 挑线杆挑线量的调节 (图30)
Adjusting the Take-up Amount of Take-up Lever(Fig. 30)

1.旋松螺钉①。

2.移动右线钩②进行调节：朝左方向(即A方向)移动，挑线量将会增加；反之朝右方向(即B方向)移动，挑线量将会减少。(右线钩上的刻线C与螺钉中心一致时为标准位置)。

3.调节完成后拧紧螺钉①。

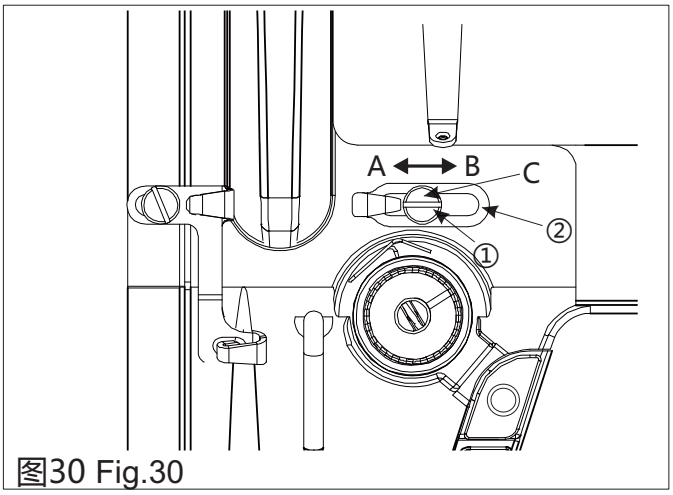

图30 Fig.30

注意:

1.为了防止缝纫机的意外启动，请关掉电源之后再进行操作。

2.缝制厚料时，应按照上述方法向左方向移动右线钩②，以增大挑线量。

3.缝制薄料时，应按照上述方法向右方向移动右线钩②，以减小挑线量。

1.Unscrewing the screw ①.

2.Move the right thread hook ② to adjust : the thread amount of thread take-up lever will incr-ease if turned it towards left (A direction), while turning it to the right (direction B) and the thre-ad amount of thread take-up lever will decrease accordingly.(The standard position is obtaine-d when graduation line C on right thread hook is aligned to screw center.)

3.Remember to tight the screw ① after adjusting.

Caution:

1.To prevent the unexpected startup of sewing machine, trim off the power supply b-efore the operation is conducted.

2.For heavy duty , move the right thread hook ② to left to add amount of thread.

3.For light material , move the right thread hook ② to right to reduce amount of the t-hread.

23 挑线弹簧的调节 (图31)
Adjusting the Take-up Spring (Fig. 31)

1.挑线簧张力的调节

1）旋松螺钉②，取出夹线器⑤(组件)。

2）旋松夹线器⑤中螺钉④。

3）转动夹线器⑤中的螺钉③进行调节：朝顺时针方向(即A方向)转动时，挑线簧的张力将增大；反之朝逆时针方向(即B方向)转动时，挑线簧的张力将减小。

4）调节完成后旋紧螺钉④，并将夹线器⑤(组件)装入机器中再旋紧螺钉②。

挑线簧张力调整适当的判断方法：确认挑线簧的张力调整好后，把面线向B方向拉出，如果在挑线簧达到最低位置之前面线B处就被拉动，

1.Adjusting the tension of take-up spring

1)Unscrew screw ②, and take out thread cl-amp ⑤(assembly).

2)Unscrew screw ④ in thread clamp ⑤.

3)Rotating the screw ③ in the thread clamp ⑤ to adjust, The tension of the thread take-up spring will become larger when turning toward the clockwise(A), otherwise smaller when tow-arding anti-clockwise (B).

4)Screw down screw ④ when adjustment is over, fit thread clamp ⑤(assembly) into the m-achine,and screw down screw ②.

Judgment basis for adjustment adequacy o-f take-up spring:Confirm that the tension of t-ake-up spring is properly adjusted, draw out the needle thread in direction B. If place B of n-eedle thread is drawn before take-up spring

请减弱挑线簧的张力。

注意:

1.为了防止缝纫机的意外启动，请关掉电源之后再进行操作。

2.通常，机器在出厂前,挑线簧均已调整妥善，只是在缝纫特殊的缝料或特殊的缝线时，才需要重新进行调整。

2.挑线弹簧挑线行程的调节

1）使用压脚扳手将压脚放下。

2）旋松紧固螺钉②。

3）转动夹线螺钉③进行调节：朝顺时针方向(即A方向)转动时，挑线弹簧①的挑线行程将增加,反之朝逆时针方向(即B方向)转动时，挑线行程将减少(标准挑线行程：在压脚被放下的状态下，距离缓线钩上方6-7mm)。

4）调节完成后拧紧紧固螺钉②。

注意:

1.为了防止缝纫机的意外启动，请关掉电源之后再进行操作。

2.通常，机器在出厂前,挑线簧均已调整妥善，只是在缝纫特殊的缝料或特殊的缝线时，才需要重新进行调整。

reaches its lowest position, reduce the tensio-n of take-up spring.

Caution:

1.To prevent the unexpected startup of sewing machine, trim off the pow-er supply before the operation is co-nducted.

2.The take-up spring is already adju-sted properly before the machine le-aves the factory as a rule, and it req-uires readjustment only for sewing of special materials or usage of spe-cial stitch threads.

2.Adjustment of the Stroke to the Thread tak-e-up Spring

1)Lower the presser foot by using the lifting lever.

2)Loosen the set screw ②.

3)Rotating the screw ③ in the clamp to adju-st, the stroke to the Thread take-up Spring ① will increase when turning toward the clockwi-se(A), otherwise decrease when toward ant-i-clockwise (B).(The standard stroke, under the state of presser foot was put down is arou-nd 6~7mm higher than the slow hook)

4).Securely tighten the screw ②.

Caution:

1.To prevent the unexpected startup of sewing machine, trim off the pow-er supply before the operation is co-nducted.

2.The take-up spring is already adju-sted properly before the machine le-aves the factory as a rule, and it req-uires readjustment only for sewing of special materials or usage of spe-cial stitch threads.

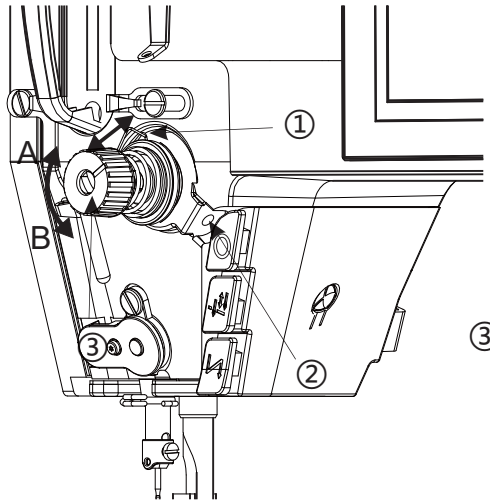

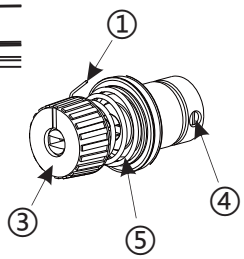

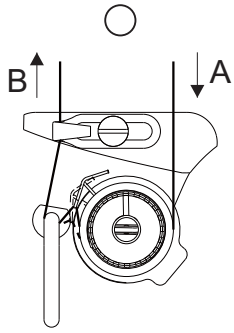

※挑线簧一直动作到最后

※The take-up spring kee-ps on functioning till the end.

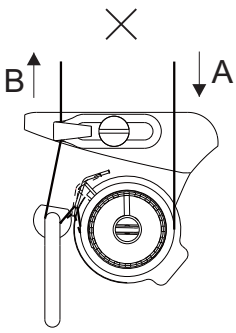

※挑线簧的张力过强，所以在动作中途面线从B处就被拉出来。

※The tension of take-up spring is too high, so needle thread is drawn out of place B in proces-s of the action.

图31 Fig.31

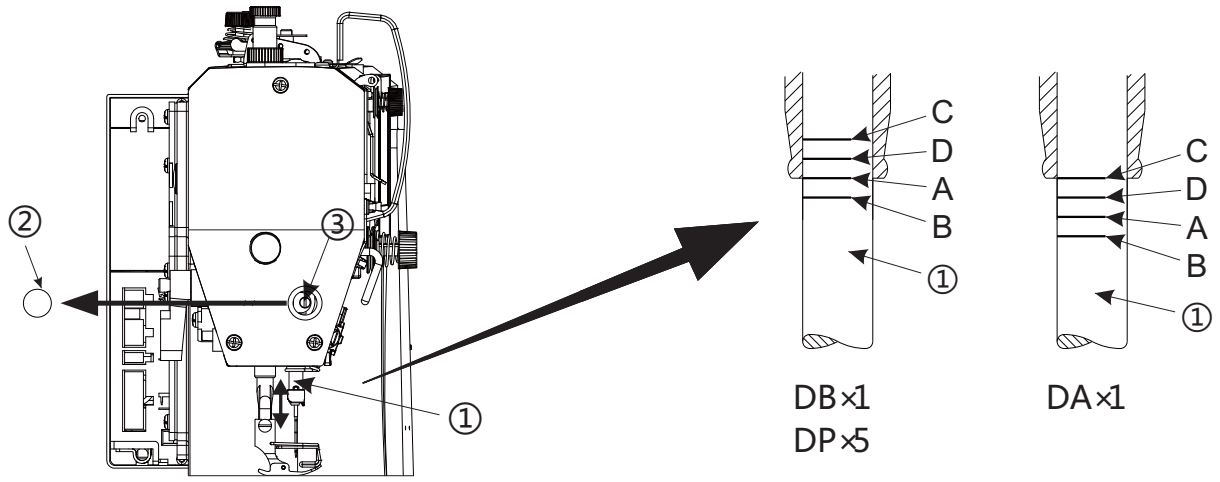

图32 Fig.32

24 针杆高度的调节 (图32)
Adjust the Height of the Needle Bar(Fig. 32)

1.转动手轮，使针杆①降到最低点。

2.拆下面板上的橡胶塞②。

3.旋松针杆连接柱紧固螺钉③，将针杆①上下移动来进行调节：使用DBX1和DPX5机针时，使针杆①上的刻线A对准针杆下套的下端；使用DAX1机针时，使针杆①上的刻线C对准针杆下套的下端。

4.调节完成后拧紧针杆连接柱紧固螺钉③，并装上橡胶塞②。

注意:

1.为了防止缝纫机的意外启动，请关掉电源之后再进行操作。

1.Turn the machine pulley to set the needle bar ① to its lowest position.

2.Remove the rubber cap ② from the face plate.

3.Unscrewing the connecting screw ③ of n-eedle bar, through moving the needle bar ① up and down to adjust, when using needle DBX1 and DPX5, the mark A on the needle bar ① should be match to the bottom of needle bar lower bushing; When using DAX1, the mark C on needle bar ① should match to the bottom o-f needle bar lower bushing.

4. Tighten the screw ③ in compression rod guide frame and assembly the rubber plug ② after adjusting.

Caution:

1.To prevent the unexpected startup of sewing machine, trim off the pow-er supply before the operation is co-nducted.

25 机针和旋梭同步的调节 (图33)
Adjust the Synchronization of the needle and hook(Fig. 34)

1.旋松2只旋梭定位螺钉①。

2.转动手轮，使针杆②从最低点向上升起：使用DBX1和DPX5机针时，使针杆②上的刻线B对准针杆下套的下端；使用DAX1机针时，使针杆②上的刻线D对准针杆下套的下端。

1.Unscrewing the two positioning screw ① of hook.

2.Rotating the hand wheel to make needle ba-r ② lift from the lowest place, when using need-le DBX1 and DPX5, the mark B on needle bar ② should match to the bottom of lower needle b-ar ② bushing, when using needle DAX1, the m-ark D on needle bar ② should match to the bot

3.移动旋梭使旋梭的梭尖③和机针④缺口处的中心保持一致。此时，应使旋梭梭尖③和机针④之间的间隙为0-0.05mm。

4.调节完成后拧紧2只旋梭定位螺钉①。

注意:

1.为了防止缝纫机的意外启动，请关掉电源之后再进行操作。

2.若机针与旋梭梭尖的间隙太小，会磨损旋梭梭尖；若间隙过大，会引起跳针。

3.若旋梭坏损了，请更换相同型号的旋梭。

-tom of lower needle bar ② bushing.

3.Moving the hook to match the hook point ③ with center of needle ④. Meantime, make the s -pace between the hook point ③ and needle ④ 0~0.05mm.

4.Tightening two positioning screw ① of hook.

Caution:

1.To prevent the unexpected startup of sewing machine, trim off the pow -er supply before the operation is co -nducted.

2.If the clearance between notch on needle and thread hooking tip of rot -ating hook is too small, rotating hoo -k tip may be worn;if the clearance is excessive,skipped stitch may take p -lace.

3.It may lead to needle breakage if o -ver-rotating the eccentric wheel tow -ards A direction.

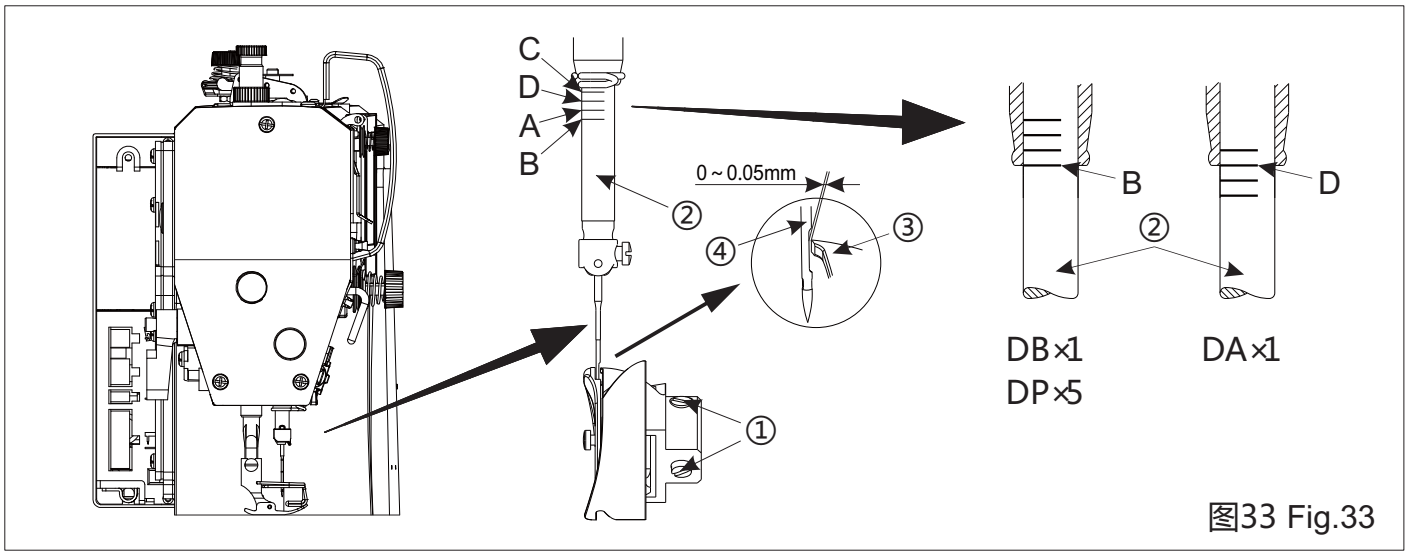

图33 Fig.33

26 机针和送料同步的调节 (图34)
Adjust the Synchronization of the Needle and Feed(Fig. 34)

1.取下橡胶塞①。

2.旋松送料偏心轮②上的两个固定螺钉③，然后轻微的旋转送料偏心轮②进行调节：要使机针早于送料时，向A方向旋转；要使机针晚于送料时，向B方向旋转(标准调节位置：送料牙从最高位置开始下降到和针板的表面一致时，机针孔上沿与针板面对齐)。

3.调节完成后拧紧2个固定螺钉③，并装上橡胶塞①。

1.Remove the rubber plug ①.

2.Loosen the two set screws ③ of the feed eccentric cam ②,and then turn the feed ecce -ntric cam ② slightly to adjust the timing : If m -ake the needle sooner than material feeding, rotate toward A direction. If make the needle l -ater than material feeding, rotate toward B di -rection. (The standard of adjustment is whe -n the feed dog falling from the highest to the surface of needle plate, the top of the needle and needle plate should at the same level).

3.Tightening two positioning screw ③ and assembly the rubber plug ① after adjusting.

注意:

1.为了防止缝纫机的意外启动，请关掉电源之后再进行操作。

2.如果将送料偏心轮②沿A方向旋转过多，则有可能导致机针断裂。

3.为了防止在重叠缝纫时布料不一致(缝线不合)，可将机针的时序调晚些。

4.为了使收线良好，可将机针的时序调早些。

Caution:

1.To prevent the unexpected startup of sewing machine, trim off the power supply before the operation is conducted.

2.If the feed lifting eccentric cam ② is turned too far in the direction A, it may cause the needle to break.

3.To prevent material slippage from occurring,retard the needle timing.

4.To improve thread tightening, advance the needle timing.

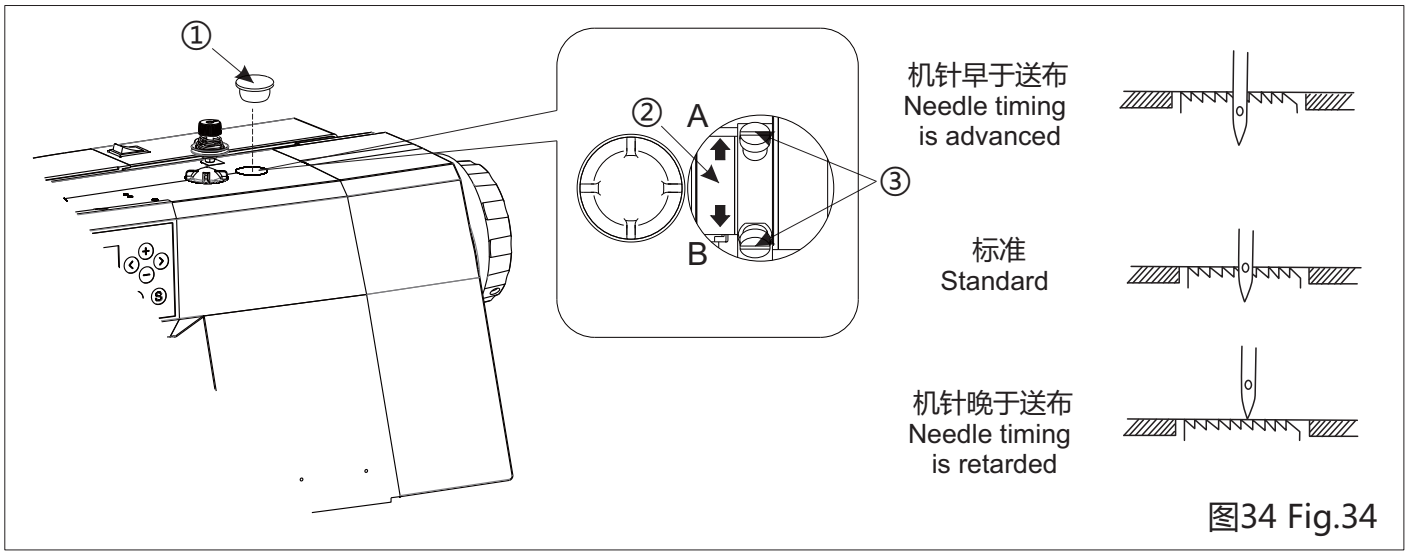

图34 Fig.34

27 送料牙高度的调节 (图35)
Adjustment of the Height of feed dog(Fig. 35)

1.转动手轮，将送料牙升到针板的最高位置。

2.将缝纫机放倒，并支到机头支柱上。

3.旋松抬牙叉形曲柄②上的紧固螺钉①。

4.转动抬牙叉形曲柄②进行调节：将抬牙叉形曲柄②向A方向转动，送料牙将变高；反之向B方向转动，送料牙将变低(当送料牙升到针板的最高位置时，中厚料机型送料牙距针板的标准高度为0.8-1.0mm，厚料机型的标准高度为1.1-1.3mm)。

5.调节完成后拧紧抬牙叉形曲柄②上的紧固螺钉①。

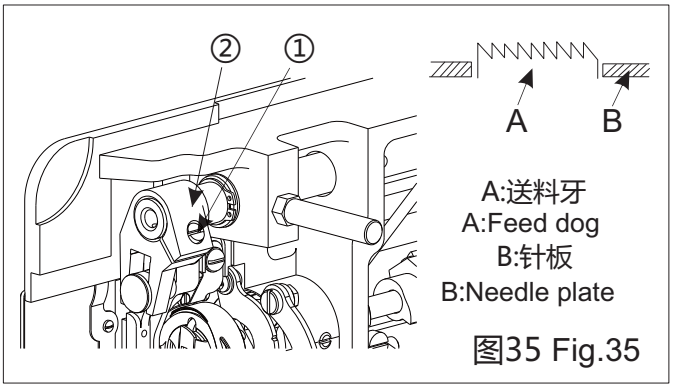

图35 Fig.35

1.Turn the pulley until the feed dog rises to the highest position.

2.Turn over the sewing machine head on the supporting bar.

3.Unscrewing the tightened screw ① in the feed lifting crank ②.

注意:

1.为了防止缝纫机的意外启动，请关掉电源之后再进行操作。

4.Rotating the feed lifting crank ② to make adjustment: the feed dog will be higher when the feed lifting crank ② is turn towards A direc-tion; turn towards B direction the feed dog wi-ll be lower.(When the feed dog in the highest position, the standard height of the type of medium-heavy machine is 0.8~1.0mm and standard height of the heavy duty machine is 1.1~1.3mm).

5.Remember to tighten the tightening screw ① in the feed lifting crank ② after adjusting.

Caution:

1.To prevent the unexpected startup of sewing machine, trim off the power supply before the operation is conducted.

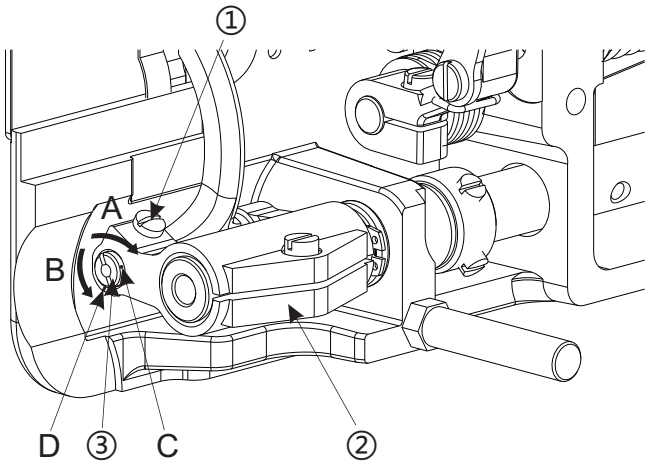

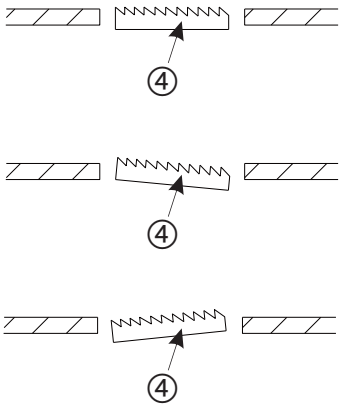

标准
Standard

前端放下
Lower
the front

前端抬起
Raise
the front

图36 Fig.36

28 送料牙倾斜的调节 (图36)
Adjust the lean of feed dog(Fig. 36)

1.转动手轮，将送料牙④升到针板的最高位置。

2.将缝纫机放倒，并支到机头支柱上。

3.旋松牙架座②上的紧固螺钉①。

4.用螺丝刀转动偏心销③进行调节：将偏心销③向A方向转动，送料牙前端放下；向B方向转动，送料牙前端抬起(当送料牙升到针板的最高位置时，送料牙标准倾斜为偏心销③上的刻点C与牙架座②上的刻横D对齐，送料牙与针板平行)。

5.调节完成后拧紧牙架座②上的紧固螺钉①。

1.Turn the pulley until the feed dog ④ rises to the highest position.

2.Turn over the sewing machine head on th-e supporting bar.

3.Unscrewing the tightening screw ① in the teeth pedestal ②.

4.Adjust the eccentric pin ③ by screw drive-r:Fall front site of tooth feed when moving the eccentric pin ③ towards A, and raising it when move towards B.(When raising the tooth feed to the highest position, The standard lean pos-ition of feed dog is that mark C on eccentric p-in ③ should be at the same level D with mark on the teeth pedestal ② and the feed dog sho-uld be parallel with needle plate.)

5.Remember to tighten the tightening screw ① in the teeth pedestal ② after adjusting

注意:

1.为了防止缝纫机的意外启动，请关掉电源之后再进行操作。

2.为了防止起皱，可降低送料牙前端。

3.为了防止在重叠缝纫时布料不一致(缝线不合)，可提高送料牙前端。

1.调节送料牙的倾斜度后 ，送料牙的高度也会发生改变，因此请重新调节送料牙的高度。

Caution:

1.To prevent the unexpected startup of sewing machine, trim off the pow-er supply before the operation is co-nducted.

2.In order to prevent puckering,lowe-r the front of the feed dog.

3.In order to prevent the material fro-m slipping,raise the front of the feed dog.

4.The height of the feed dog will cha-nge after the angle has been adjust-ed,so it will be necessary to re-adju-st the height of the feed dog.

29 定刀和动刀的更换 (图37、图38、图39)
Replacing the fixed knife and movable knife(Fig. 37, Fig. 38, Fig. 39)

1.定刀的拆卸方法

1）将缝纫机放倒，并支到机头支柱上。

2）松掉螺钉①，拆下旋梭定位钩②。

3）松掉螺钉③，取出定刀④。

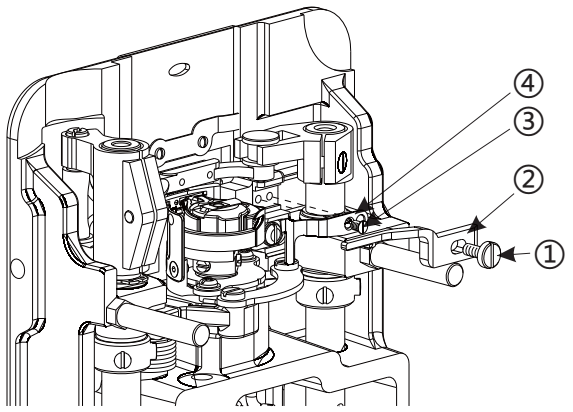

图37 Fig.37

注意:

1.为了防止缝纫机的意外启动，请关掉电源之后再进行操作。

2.安装定刀顺序请按拆卸定刀顺序的相反步骤进行。

1.Removing the stationary trimmer

1) Lay down the sewing machine head.

2) crew off screw ①, and remove positionin-g hook ② of rotating hook.

3) Screw off screw ③, and take out stationa-ry trimmer ④.

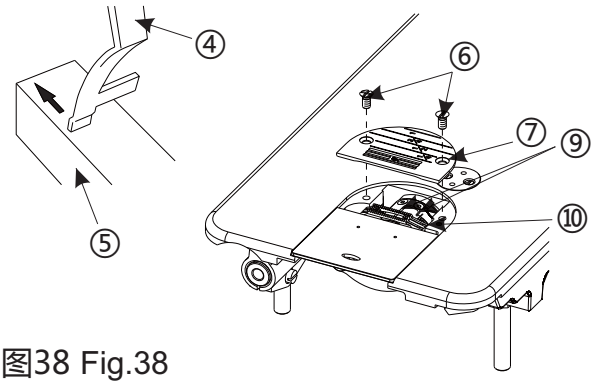

图38 Fig.38

Caution:

1.To prevent the unexpected startup of sewing machine, trim off the power supply before the operation is conducted.

2.Carry out the above steps in reverse to install the fixed knife.

2.定刀刀刃的研磨方法

如果定刀的刃部受损或磨损，请将定刀④如图所示在油磨石⑤上研磨定刀。

3.动刀的拆卸方法

1）取下机针。

2）用抬压脚扳手将压脚抬起。

3）松掉螺钉⑥(2颗)，然后取出排屑斗板组件⑦。

4）转动缝纫机手轮，将针杆上升至最高位置。

5）将缝纫机放倒，并支到机头支柱上。

6）按箭头所示方向方向推动切线驱动曲柄⑧直至看到螺钉⑨的位置为止。

7）松掉螺钉⑨(2颗)，然后取出动刀⑩。

注意:

1.为了防止缝纫机的意外启动，请关掉电源之后再进行操作。

2.安装动刀顺序请按拆卸动刀顺序的相反步骤进行。

4)Turn the handwheel to allow the needle b-ar to reach its highest position.

5)Lay down the sewing machine head.

6)Push thread-trimming driving crank lever ⑧ in direction of arrow till the position of scre-w ⑨ is exposed.

7)Screw off screw ⑨ (2 pieces), and take o-ut movable trimmer ⑩.

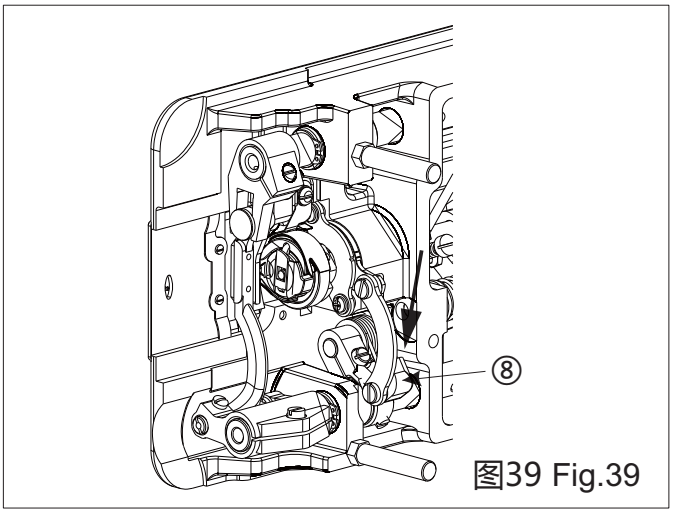

图39 Fig.39

2.Grinding the stationary trimmer

If the cutting performance deteriorates,Sh-arpen the fixed knife ④ on a whetstone as Sh-own in the illustration ⑤.

3.Removing the movable trimmer

1)Remove the needle.

2)Uplift the presser foot using foot lifting le-ver.

3)Screw off screw ⑥ (2 pieces) , and take o-ut Clearance hole plate ASM.⑦.

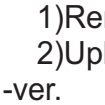

Caution:

1.To prevent the unexpected startup of sewing machine, trim off the pow-er supply before the operation is co-nducted.

2.Carry out the above steps in rever-se to install the movable knife.

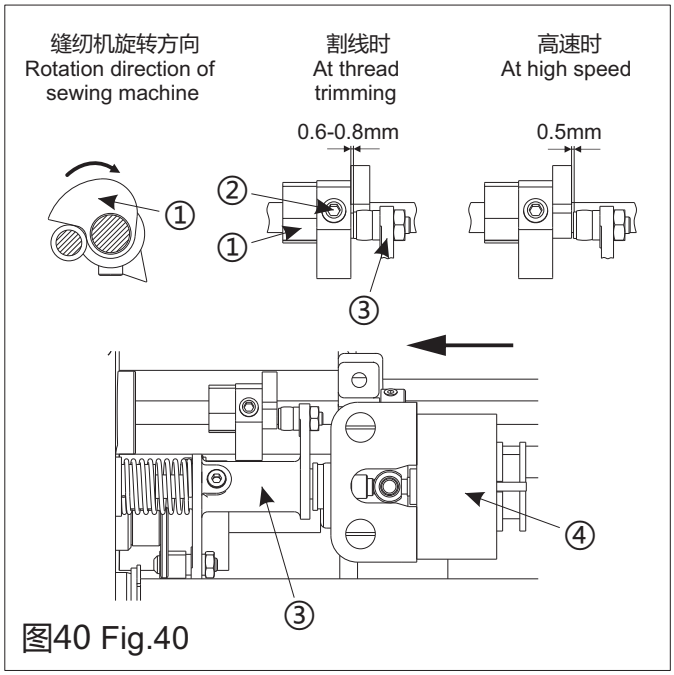

图40 Fig.40

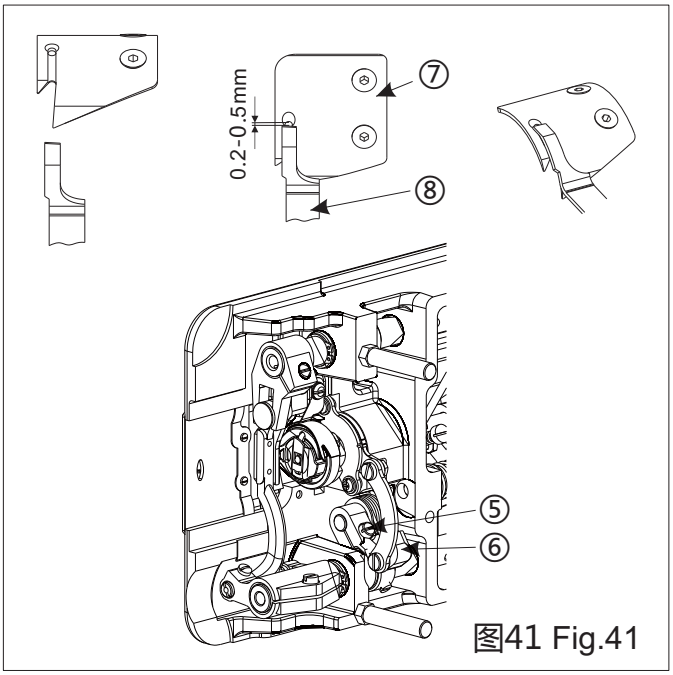

图41 Fig.41

30 剪线装置的调节 (图40、图41)
Adjusting the Thread-trimming Device(Fig. 40, Fig. 41)

1.剪线凸轮位置的调节

1）转动手轮，将针杆从最低位置上升5mm。

2）再用手按箭头方向压紧剪线电磁铁④内芯，使剪线凸轮曲柄③中的滚珠压进剪线凸轮①的凹部。这时调节剪线凸轮①位置使剪线凸轮①的端面与滚珠左端面的间隙为0.6-0.8mm。

3)用25kgf· cm的力矩紧固2颗剪线凸轮螺钉②。

4)剪线凸轮曲柄③向右复位后，请确认剪线凸轮①右端面与剪线凸轮曲柄③滚珠左端面的间隙为0.5mm。

注意:
1.为了防止缝纫机的意外启动，请关掉电源之后再进行操作。

2.动刀、定刀位置的调节

压紧电磁铁铁芯，滑块体组件③中滚珠进入剪线凸轮①的凹部，转动上轮，当切线驱动曲柄⑥带动动刀⑦做剪线动作时，定刀⑧前端与动刀⑦刃口应当啮合0.2~0.5mm。如果没有啮合，旋松螺钉⑤移动切线驱动曲柄⑥使定刀⑧的前端与动刀⑦的刃部啮合。动刀⑦、定刀⑧位置调节后要能保证在手动剪线时能剪断203棉线。

注意:
1.为了防止缝纫机的意外启动，请关掉电源之后再进行操作。

1.Adjusting the position of thread-trimming c-am

1)Rotating the hand wheel to raise the nee-dle bar 5mm from the lowest place.

2)To press the core in trimming electromag-net ④ with your hands by arrow direction, all-owing the ball of the trimming cam crank ③ p-ress into the cavity in trimming cam ①. And t-he place of trimming cam ① remains the gap which between the end face of trimming cam ① and the left side on the ball is 0.6~0.8mm.

3)With the 25kgf.cm force to tighten the two screws ② from trimming cam .

4)When the trimming cam crank ③ back to its original place, please confirm that the gap between the right side on the trimming cam ① and the left side on the ball of the trimming ca-m crank ③ is 0.5mm.

Caution:
1.To prevent the unexpected startup of sewing machine, trim off the pow-er supply before the operation is co-nducted.

3.Adjusting the positions of movable trimmer and stationary trimmer

Hold down electromagnet core so that the b-alls in slide block assembly ③ is pressed into the recess on thread-trimming cam ①. Turn th-e upper wheel, and the front end stationary tr-immer ⑧ and cutting edge of movable trimm-er ⑦ shall be engaged for 0.2~0.5mm when t-hread-trimming driving crank lever ⑥ drives movable trimmer ⑦ to perform thread-trimmi-ng action. If no engagement is achieved, uns-crew screw ⑤ and move thread-trimming dri-ving crank lever ⑥ to engage the front end st-ationary trimmer ⑧ and cutting edge of mova-ble trimmer ⑦. The adjusted positions of mo-vable trimmer ⑦ and stationary trimmer ⑧ m-ust ensure that cotton thread 203 can be snip-ped when manual thread-trimming is conduc-ted.

Caution:
1.To prevent the unexpected startup of sewing machine, trim off the pow-er supply before the operation is co-nducted.

31 保养 (图42、图43、图44)
Maintenance(Fig. 42, Fig. 43, Fig. 44)

为了保持缝纫机的机能，而能够长久的使用，请每日进行以下的保养。

1.确认齿轮箱油量

请确认油标的前端应该在油标指示窗的上刻线和下刻线之间。(详细内容请参考[6机器的加油])

2.清扫

1）抬起压脚。

2）将两颗针板固定螺钉①拆下，然后再拆下针板②。

3）用软毛刷清除送料牙③及剪线装置上粘附的灰尘。

4）将针板②及两颗针板固定螺钉①装上。

5）将缝纫机放倒，并支到机头支柱上。

6）拆下梭芯套④。

7）用软布擦去旋梭⑤上的灰尘，并确认旋梭⑤是否受损。再用软布把旋梭周围底盖内的灰尘也擦拭干净。

8）将梭芯从梭芯套④拆下，用软布清洁梭芯套④。

9）将梭芯装入梭芯套④，再将梭芯套④重新装入缝纫机。

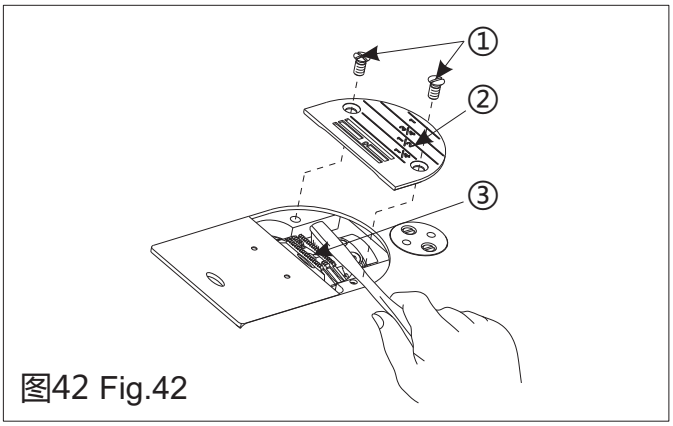

图42 Fig.42

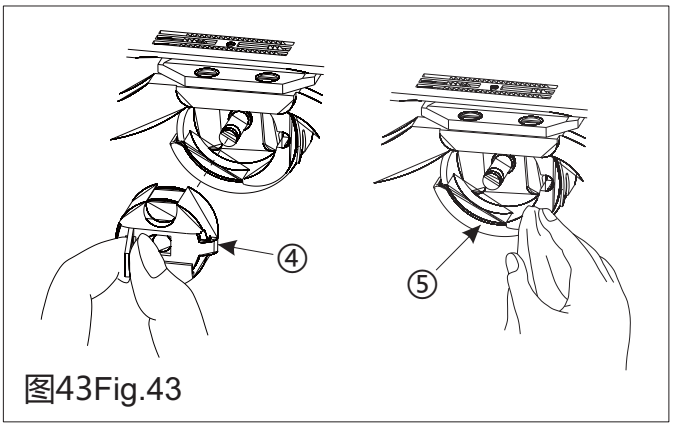

图43Fig.43

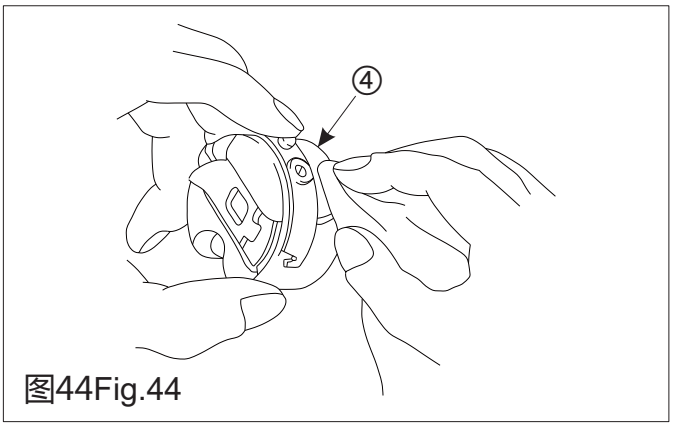

图44Fig.44

The following cleaning operations should be carried out each day in order to maintain the pe-rformance of this machine and to ensure a long service life.

3.Ensuring the oil amount in gear case

Confirm that the top of oil amount indicating rod is between the upper engraved marker line and the lower engraved marker line of the oil amount indicating window.(For the details, refer to “6 Lubrication of machine”)

2.Cleaning

1)Raise the presser foot.

2)Remove the two screws ①,and then remove the needle plate ②.

3)Remove dust adhered to feed dog ③ and thread trimmer unit with a soft brush or cloth.

4)Install the needle plate ② with the two screws ①.

5)Turn over the sewing machine down on the supporting bar of head.

6)Remove the bobbin case ④.

7)Wipe off any dust from the rotary hook ⑤ with a soft cloth, and check that there is no dama-ge to the rotary hook ⑤.Wipe out with the cloth dust and hook oil drained in the under cover ne-ar the hook.

8)Remove the bobbin from the bobbin case ④ and clean the bobbin case ④ with a cloth.

9)Insert the bobbin into the bobbin case ④,and then place the bobbin case ④ back into the machine.

32 缝纫机的搬运及放置注意事项 (图45、图46)
Carrying and Placing of the Sewing Machine(Fig. 45, Fig. 46)

1.缝纫机的搬运方法

请按图示那样,由两人来手持缝纫机机架主体进行搬运。

2.放置缝纫机时的注意事项

放置缝纫机时，请注意一定要水平的放置到平坦的地方。同时在放置缝纫机的地方，请不要放螺丝刀等凸起物件。

1.Carrying of the machine

It needs to hold tight frame body of the sewi-ng machine by two people as the picture sho-ws.

2.Attention for placing

Must be put in the plain site. Clear the scre-wdriver or something embossment out of the placing site.

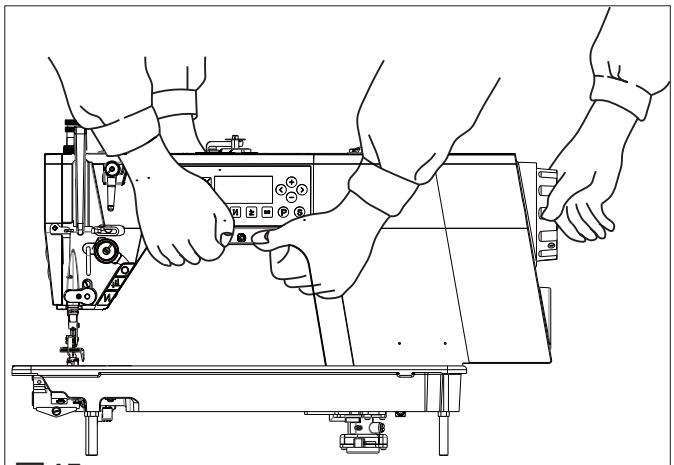

图45 Fig.45

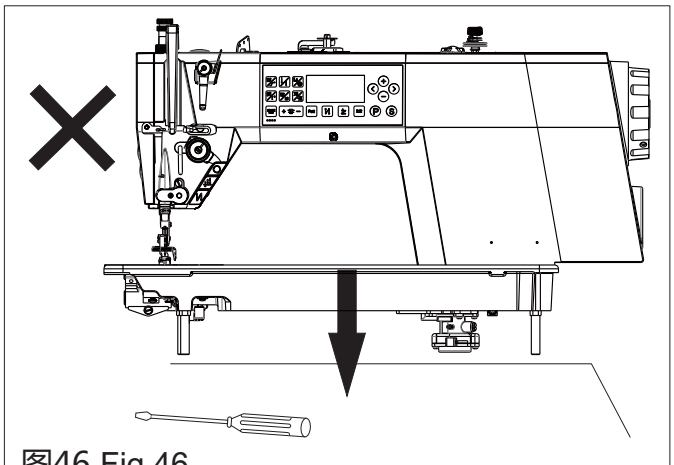

图46 Fig.46

目　　录
CONTENTS

零件样本
Parts Book

A 机壳分组件 Machine Frame & Miscellaneous Cover Components • 2

B 上轴、挑线分组件 Main Shaft & Thread Take-up Cover Components • 4

C 针杆、夹线分组件 Needle bar & thread tension components • 5

D 压料、松线分组件 Presser bar & tension release components • 8

E 钩线分组件 Hook of driving shaft components • 11

F 送料分组件 Feed mechanism components • 13

H 剪线分组件 Thread trimmer components • 16

I 润滑分组件 Lubrication Components • 19

J 油盘、膝抬压脚分组件 Presser Foot Components Of Oil Plate Knee Lift • 21

K 过线架分组件 Components Of Thread-running Stand • 23

L 附件 Auxiliaries • 25

M 电控分组件 Drive-by-wire Components • 27

A 机壳分组件
Machine frame&miscellaneous cover components

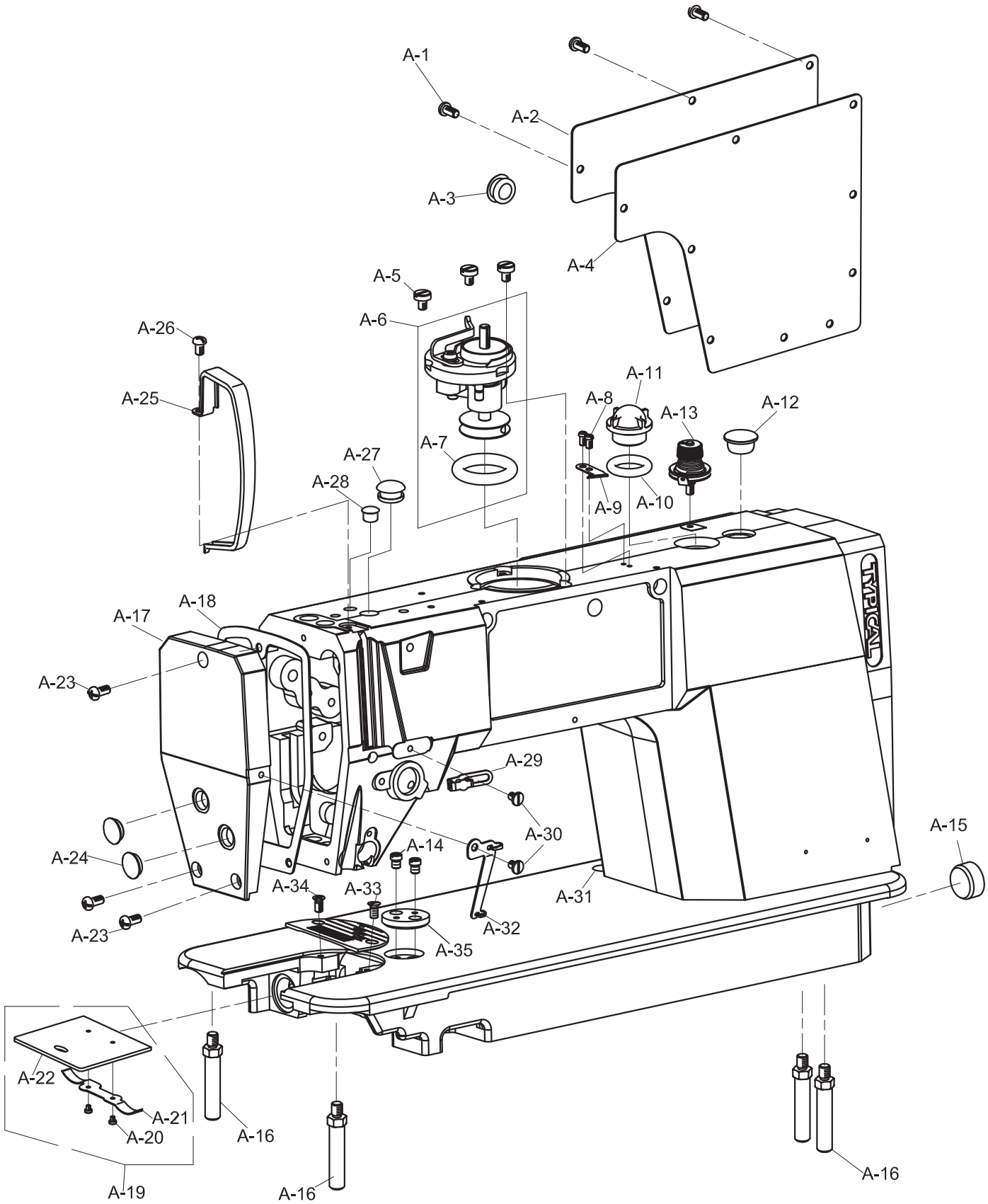

A 机壳分组件
Machine frame&miscellaneous cover components

序 号 Ref NO.	物 料号 part. NO.	名 称	Description	数量 Q'ty	备 注 Remark
A-1	10008972	螺钉	Screw	9	
A-2	200006848	后窗板	Side plate	1	
A-3	10008977	橡胶塞	Rubber plug	1	
A-4	100009201	后窗板垫	Side plate gasket	1	
A-5	10004380	螺钉	Screw	3	
A-6	100009258	绕线器	Bobbin wider ASM.	1	
A-7	10008773	橡胶轮	Rubber ring	1	
A-8	10050423	螺钉	Screw	2	
A-9	10011149	绕线切刀	Thread cutter	1	
A-10	10008939	O形圈	O-ring	1	
A-11	10008938	油窗	Oi l window	1	
A-12	10009576	橡胶塞	Rubber plug	1	
A-13	10051431	绕线夹线器	Bobbin thread tension ASM.	1	
A-14	10004374	螺钉	Screw	1	
A-15	10008941	橡胶塞	Rubber plug	1	
A-16	10002577	底板支柱	Bed s crew stud	4	
A-17	200006847	面板	Face plate	1	
A-18	100009199	面板垫	Face plate gasket	1	
A-19	10013706	推板部件	Side plate ASM	1	
A-20	10010080	螺钉	Screw	2	
A-21	10003963	推板簧	Spring of side	1	
A-22	10003960	推板	Side plate	1	
A-23	10008972	螺钉	Screw	3	
A-24	10008977	橡胶塞	Rubber plug	2	
A-25	200003887	挑线杆防护罩	Thread take-up lever cover	1	
A-26	10008934	螺钉	Screw	1	
A-27	10008942	橡胶塞	Rubber plug	1	
A-28	10008943	橡胶塞	Rubber plug	1	
A-29	10008940	右线钩	Arm thread guide right	1	
A-30	10008973	螺钉	Screw	2	
A-31	100005289	电线过线套	Rubber plug	1	
A-32	10040996	左线钩	Arm thread guide left	1	
A-33	10009005	螺钉	Screw	1	
A-34	10012463	螺钉	Screw	1	
A-35	100004582	限位挡片	Ruler plate		

B 上轴、挑线分组件
Main shaft&thread take-up components

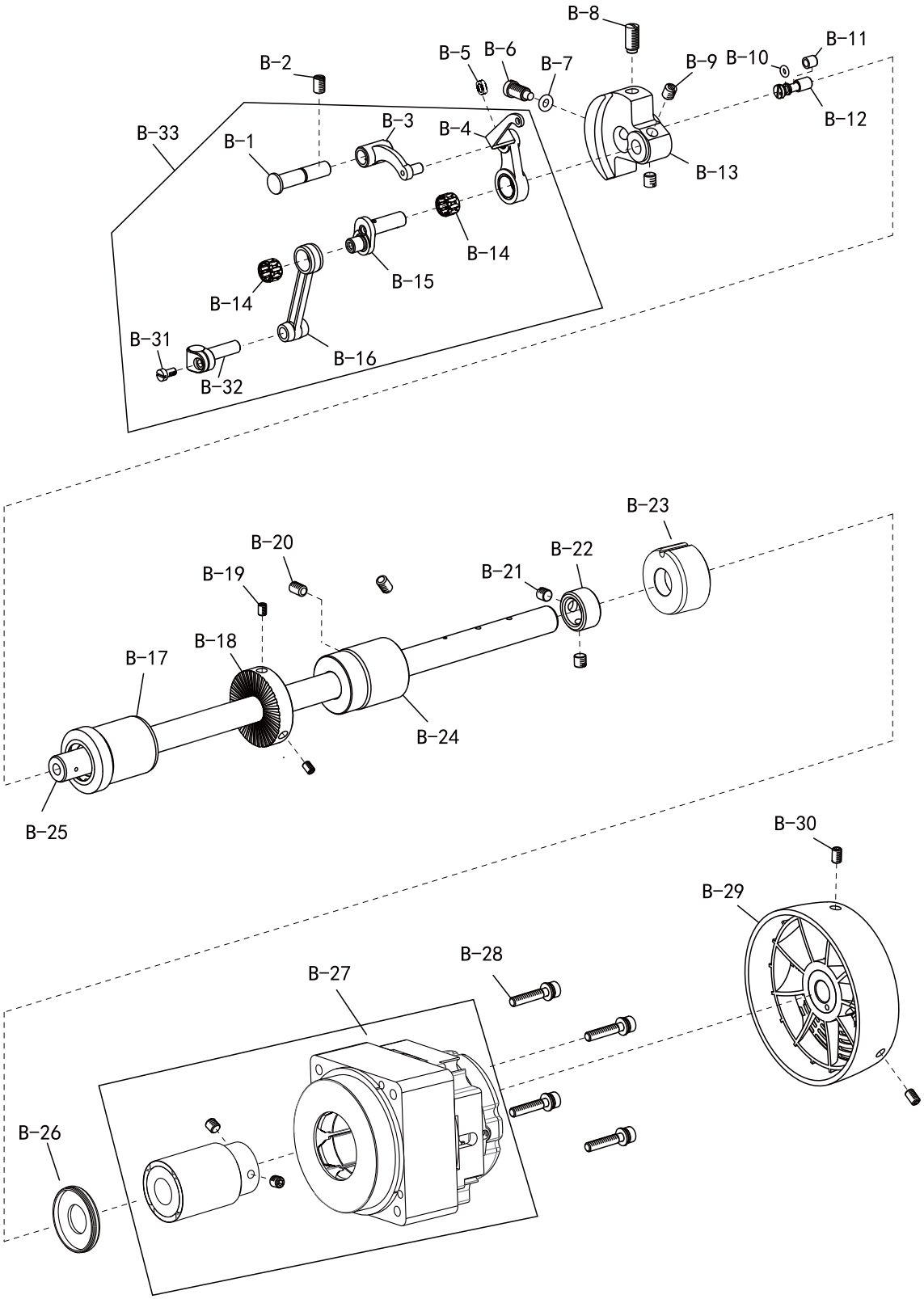

B 上轴、 挑线分组件
Main shaft&thread take-up components

序 号 Ref NO.	物 料号 part. NO.	名 称	Description	数量 Q'ty	备 注 Remark
B-1	10050672	挑线连杆销	Thread take-up crankshaft	1	
B-2	10010083	螺钉	Screw	1	
B-3	10010535	挑线连杆	Thread take-up bar	1	
B-4	10038474	挑线杆分部件	Thread take-up lever Asm.	1	
B-5	10010539	挑线杆防油圈	Oil resistant cover	1	
B-6	10010545	螺钉	Screw	1	
B-7	10010534	O形圈	O-ring	1	
B-8	10010082	螺钉	Screw	1	
B-9	10010065	螺钉	Screw	2	
B-10	10010538	O形圈	O-ring	1	
B-11	10010540	油量调节销套	Sleeve of adjusting pin	1	
B-12	10010504	油量调节销	Adjusting pin	1	
B-13	100009044	针杆曲柄	Counterweight	1	
B-14	10010504	滚针轴承	Bearing	2	
B-15	10004144	挑线曲柄	Needle bar crank	1	
B-16	10010592	针杆连杆	Needle bar crank rod	1	
B-17	10044580	上轴前轴套	Bearing support	1	
B-18	10004472	绕线主动轮	Wheel	1	
B-19	10012062	螺钉	Screw	2	
B-20	10010506	螺钉	Screw	1	
B-21	10005020	螺钉	Screw	2	
B-22	10010542	上轴挡圈	Thrust collar	1	
B-23	10056893	上轴后轴套	Bearing support	1	
B-24	10007239	上轴中轴套	Bearing support	1	
B-25	100002227	上轴	Main shaft	1	
B-26	100002521	上轴油封	Oil seal	1	
B-27	100005589	电机	Motor	1	
B-28	100001396	螺钉	Screw	4	
B-29	200006849	上轮	Head wheel	1	
B-30	10011232	螺钉	Screw	4	
B-31	10011063	螺钉	Screw	1	
B-32	10010590	针杆连接柱	Needle bar holder	1	
B-33	100001349	挑线杆组件	Thread take up lever Asm ·	1	

C 针杆、夹线分组件
Needle bar & thread tension components

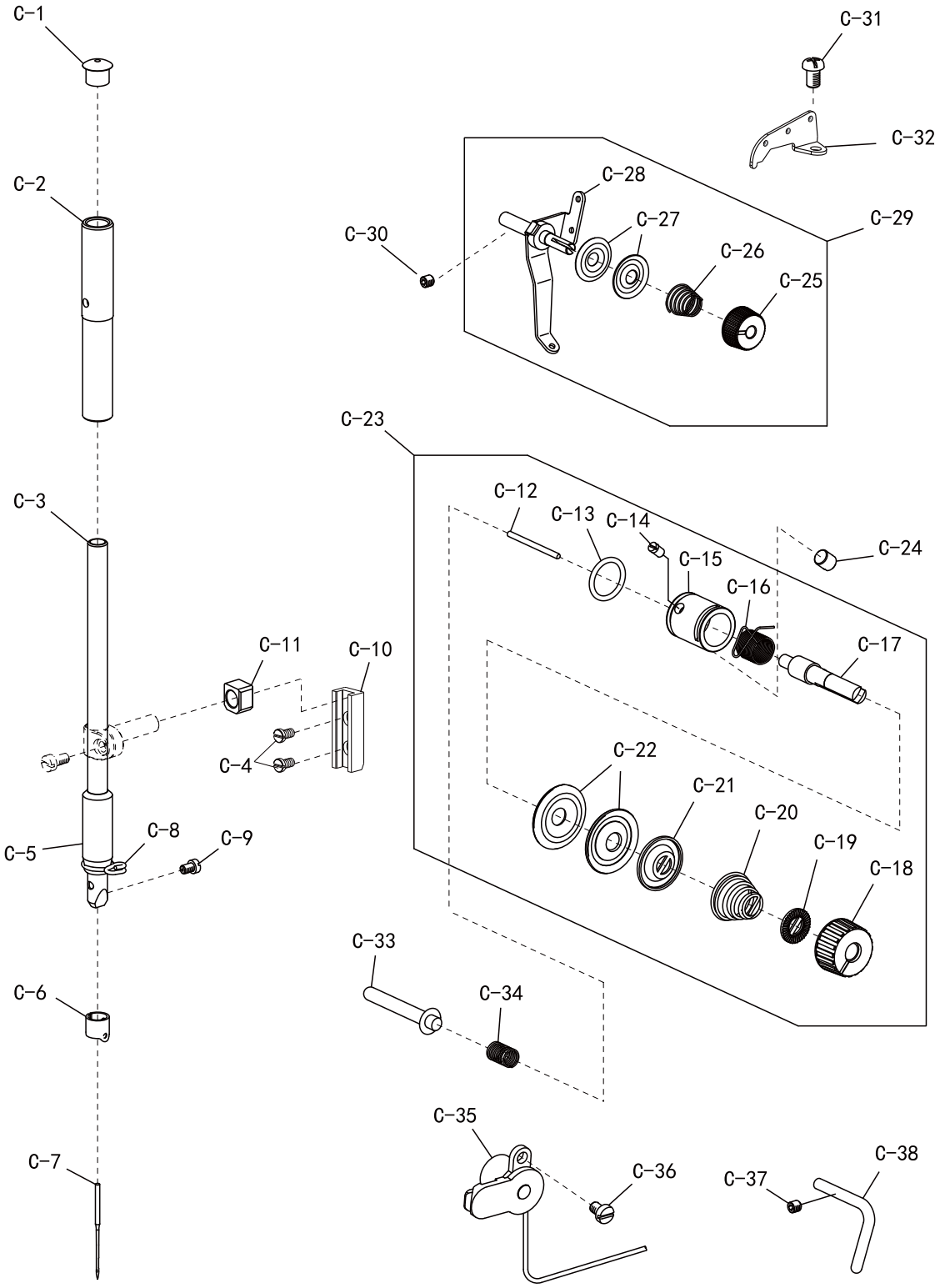

C 针杆、 夹线分组件
Needle bar & thread tension components

序 号 Ref NO.	物 料号 part. NO.	名 称	Description	数量 Q'ty	备 注 Remark
C-1	10010587	橡胶塞	Rubber plug	1	
C-2	10011063	针杆上轴套	Bearing support	1	
C-3	10045046	针杆	Needle bar	1	
C-4	10008972	螺钉	Screw	2	
C-5	10014117	针杆下轴套	Bearing support	1	
C-6	10045047	针杆下轴套线钩	Needle bar thread guide	1	
C-7	10034917	机针	Needle DBX1 14#	1	
C-8	100006700	针杆线钩	Needle bar thread guide	1	
C-9	10010588	支针螺钉	Screw	1	
C-10	10054645	滑块导轨	Needle bar holder	1	
C-11	10011194	针杆连接柱滑块	Slide block	1	
C-12	10004184	松线钉	Thread release pin	1	
C-13	10004183	O形圈	O-ring	1	
C-14	10004200	螺钉	Screw	1	
C-15	10039524	挑线簧调节座	Tension post socket	1	
C-16	10004201	挑线簧	Spring	1	
C-17	10004177	夹线螺钉	Screw	1	
C-18	10012981	夹线螺母	Nut	1	
C-19	10004199	夹线制动板	Tension disc stopper	1	
C-20	10004176	夹线簧	Spring	1	
C-20	10005941	夹线簧	Spring	1	
C-21	10004179	松线板	Thread release disc	1	
C-22	10004180	夹线板	Tension disc holder	2	
C-23	10041354	夹线器	Thread take-up device	1	
C-24	10006264	螺钉	Screw	1	
C-25	10006022	夹线螺母	Nut	1	
C-26	10005838	夹线簧	Spring	1	
C-27	10005839	夹线板	Tension disc holder	2	
C-28	10005841	夹线螺钉	Screw	1	
C-29	100004910	上夹线器	Thread take-up device	1	
C-30	10009074	螺钉	Screw	1	
C-31	10008934	螺钉	Screw	1	
C-32	10033232	上过线板	Thread tension guide	1	
C-33	10058041	松线辅钉	Tension release supporting pin	1	
C-34	10050348	弹簧	Spring	1	
C-35	100009750	电子夹线器	Electromagnet	1	
C-36	10005204	螺钉	Screw	1	
C-37	10009074	螺钉	Screw	1	
C-38	10039823	缓线钩	Presser bar thread guide	1	

D 压料、松线分组件
Presser bar& tension release componts

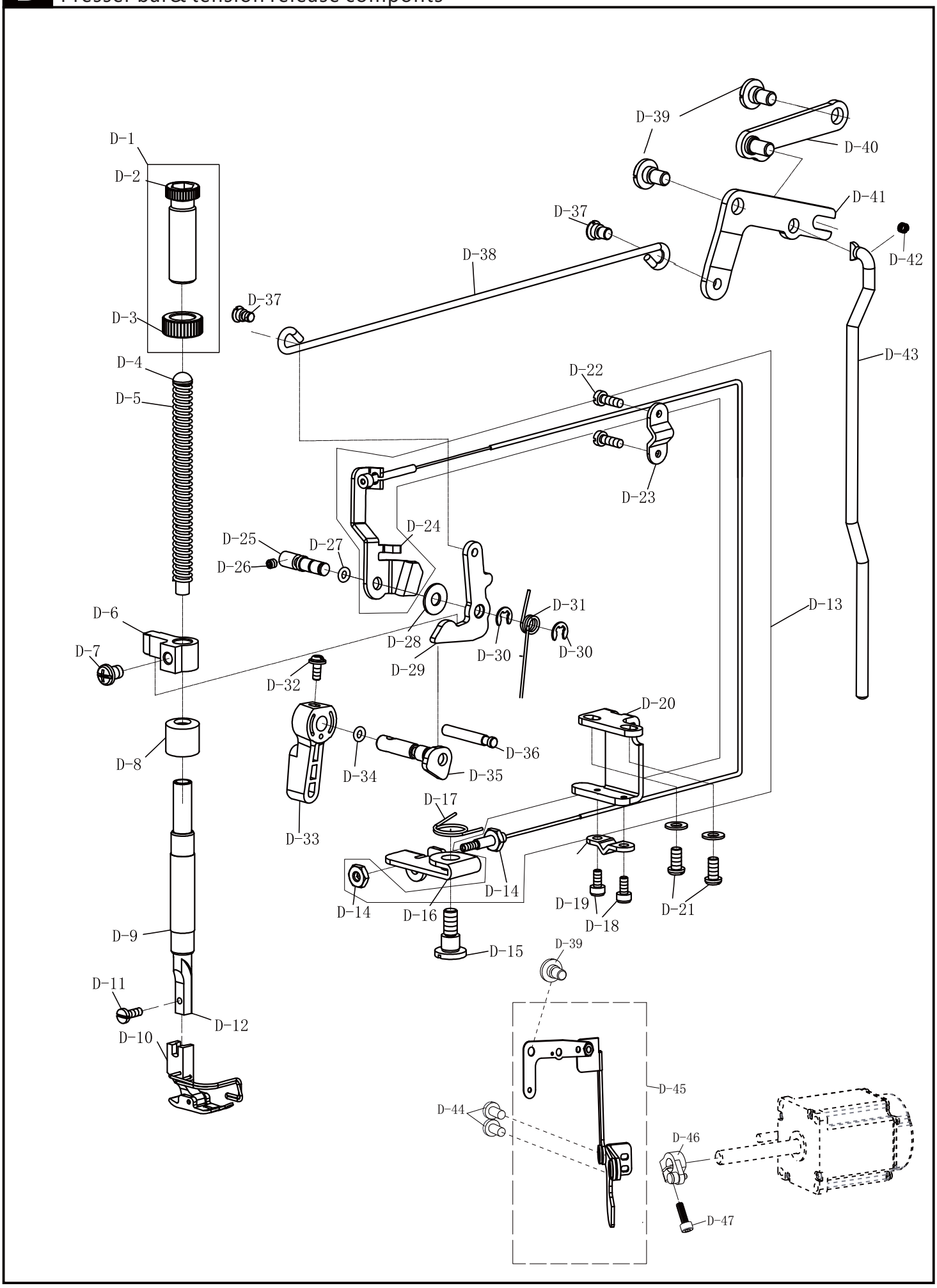

D 压料、 松线分组件
Presser bar & tension release components

序 号 Ref NO.	物 料号 part. NO.	名 称	Description	数量 Q'ty	备 注 Remark
D- 1	10008409	调压螺钉组件	Screw ASM	1	
D- 2	10011022	螺钉	Screw	1	
D- 3	10011023	螺母	Nut	1	
D- 4	10004439	调压导杆	Presser guide bar	1	
D- 5	10004473	弹簧	Spring	1	
D- 6	10039365	压杆导架	Presser guide bar bracket	1	
D- 7	10000325	螺钉	Screw	1	
D- 8	100003533	压紧杆防油罩	Oil protector cover		
D- 9	10014118	轴套	Bearing support		
D- 10	10044596	活压脚部件	Presser foot ASM	1	
D- 11	10010650	螺钉	Screw	1	
D- 12	10010646	压杆	Presser bar	1	
D- 13	100009650	抬压脚拉线组件	Foot lifter pull thread components	1	
D- 14	10005834	螺母	Nut	2	
D- 15	10012467	螺钉	Screw	1	
D- 16	10008860	松线座	Loosing plate	1	
D- 17	10008834	弹簧	Spring	1	
D- 18	10006624	螺钉	Screw	2	
D- 19	10013615	挡线板	Fixing shutter	1	
D- 20	10008811	松线钢绳座	Loosing plate	1	
D- 21	10008972	螺钉	Screw	2	
D- 22	10009037	螺钉	Screw	2	
D- 23	10039378	钢丝绳压板	Wire rope pressing plate	1	
D- 24	100009207	松线顶板	Tension release plate	1	
D- 25	10039373	销	Pin	1	
D- 26	10009074	螺钉	Screw	3	
D- 27	10010027	O形圈	O-ring	1	
D- 28	10050590	垫圈	Snap ring	1	
D- 29	10050188	升降板	Lifting lever	1	
D- 30	10013038	挡圈	Snap ring	2	
D- 31	10052046	弹簧	Spring	1	
D- 32	10010016	螺钉	Screw	1	
D- 33	10051430	压脚扳手	Hand liter		
D- 34	10010027	O形圈	O-ring	1	
D- 35	10050190	压脚扳手凸轮部件	Hand lifter CAM ASM	1	
D- 36	10039374	销	Pin		
D- 37	10010651	螺钉	Screw	2	
D- 38	100002079	抬压脚拉杆	Lifting lever connecting rod	1	
D- 39	10010652	螺钉	Screw	2	
D- 40	100003258	抬压脚连接板	Presser foot lifter connector plate	1	
D- 41	100002081	抬压脚后杠杆	Lif ing lever link	1	

D 压料、 松线分组件
Presser bar & tension release components

序 号 Ref NO.	物 料号 part. NO.	名 称	Description	数量 Q'ty	备 注 Remark
D- 42	10009205	弹簧	Spring	1	
D- 43	100003507	抬压脚顶杆	Connecting rod ver rical	1	
D- 44	10000134	螺钉	Screw	2	
D- 45	100009212	抬压脚组件	Lifting foot ASM.	1	
D- 46	100006642	抬压脚曲柄组件	Lifting foot crank ASM.	1	
D- 47	10005139	螺钉	Screw	1	

E 钩线分组件
Hook of driving shaft components

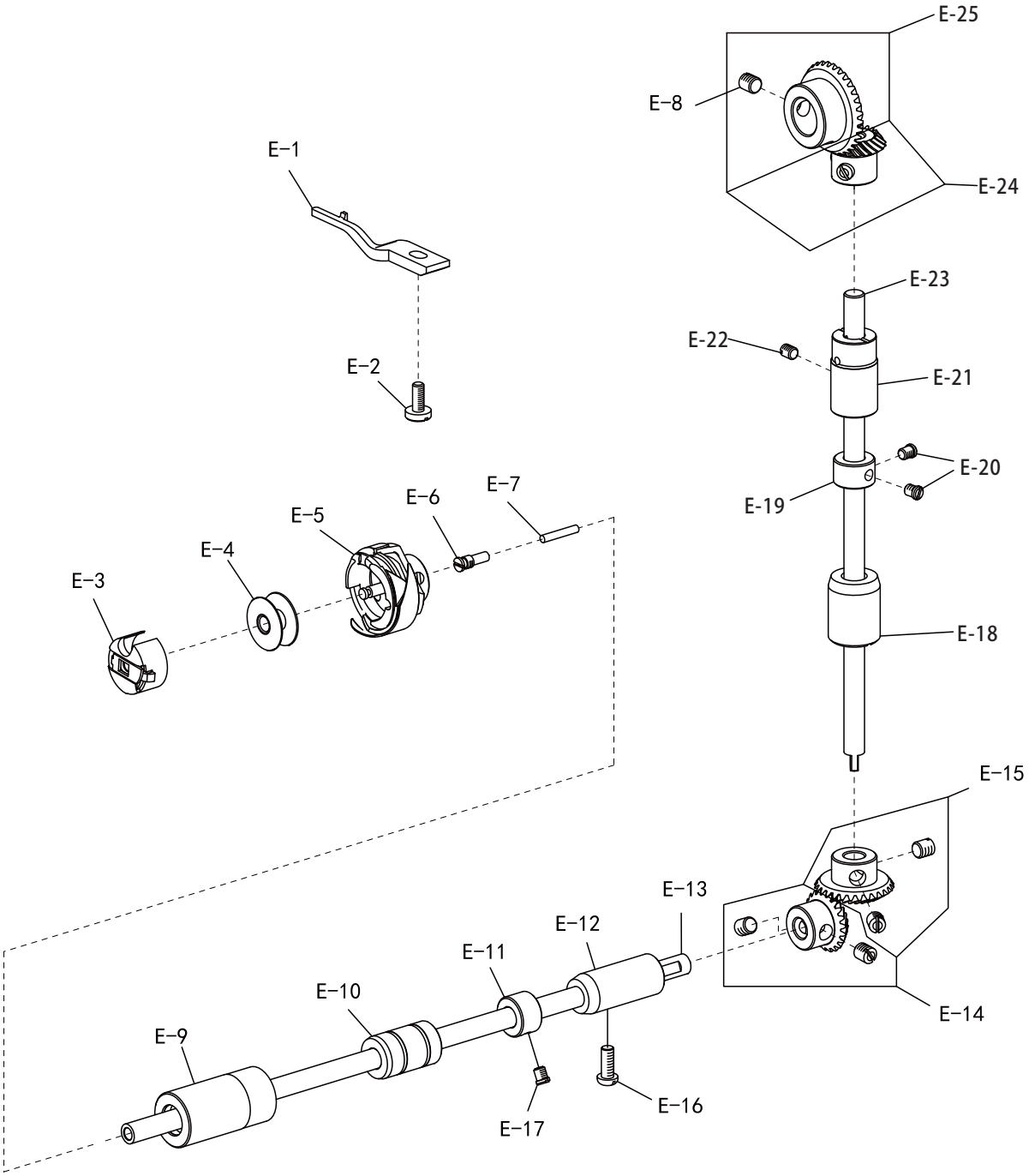

E 钩线分组件
Hook of driving shafctompon ents

序 号 Ref NO.	物 料号 part. NO.	名 称	Description	数量 Q'ty	备 注 Remark
E-1	10031259	旋梭定位钩	Positioning finger	1	
E-2	10011101	螺钉	Screw	1	
E-3	10006924	梭壳	Bobbin case	1	
E-4	10025484	梭芯	Bobbin	1	
E-5	10038530	旋梭	Hook	1	
E-6	10010064	限油螺钉	Screw	1	
E-7	10010063	油芯	Oil wick	1	
E-8	10010065	螺钉	Screw	8	
E-9	10058044	下轴前轴套	Bearing support	1	
E-10	10008857	下轴中轴套	Bearing support	1	
E-11	10010058	挡圈	Snap ring	1	
E-12	100008203	下轴后轴套	Bearing support	1	
E-13	10008821	下轴	Hook driving shaft	1	
E-14	10002560	下轴伞齿轮组件	Gear	1	
E-15	10002509	竖轴下伞齿轮组件	Gear	1	
E-16	10010030	螺钉	Screw	1	
E-17	10010059	螺钉	Screw	2	
E-18	100008205	竖轴下轴套	Bearing support	1	
E-19	10010058	挡圈	Snap ring	1	
E-20	10010059	螺钉	Screw	2	
E-21	10007267	竖轴上轴套	Bearing support	1	
E-22	10039610	螺钉	Screw	1	
E-23	10010057	竖轴	Upright shaft	1	
E-24	10002561	竖轴上伞齿轮组件	Gear	1	
E-25	10002445	上轴伞齿轮组件	Gear	1	

F 送料分组件
Feed mechanism components

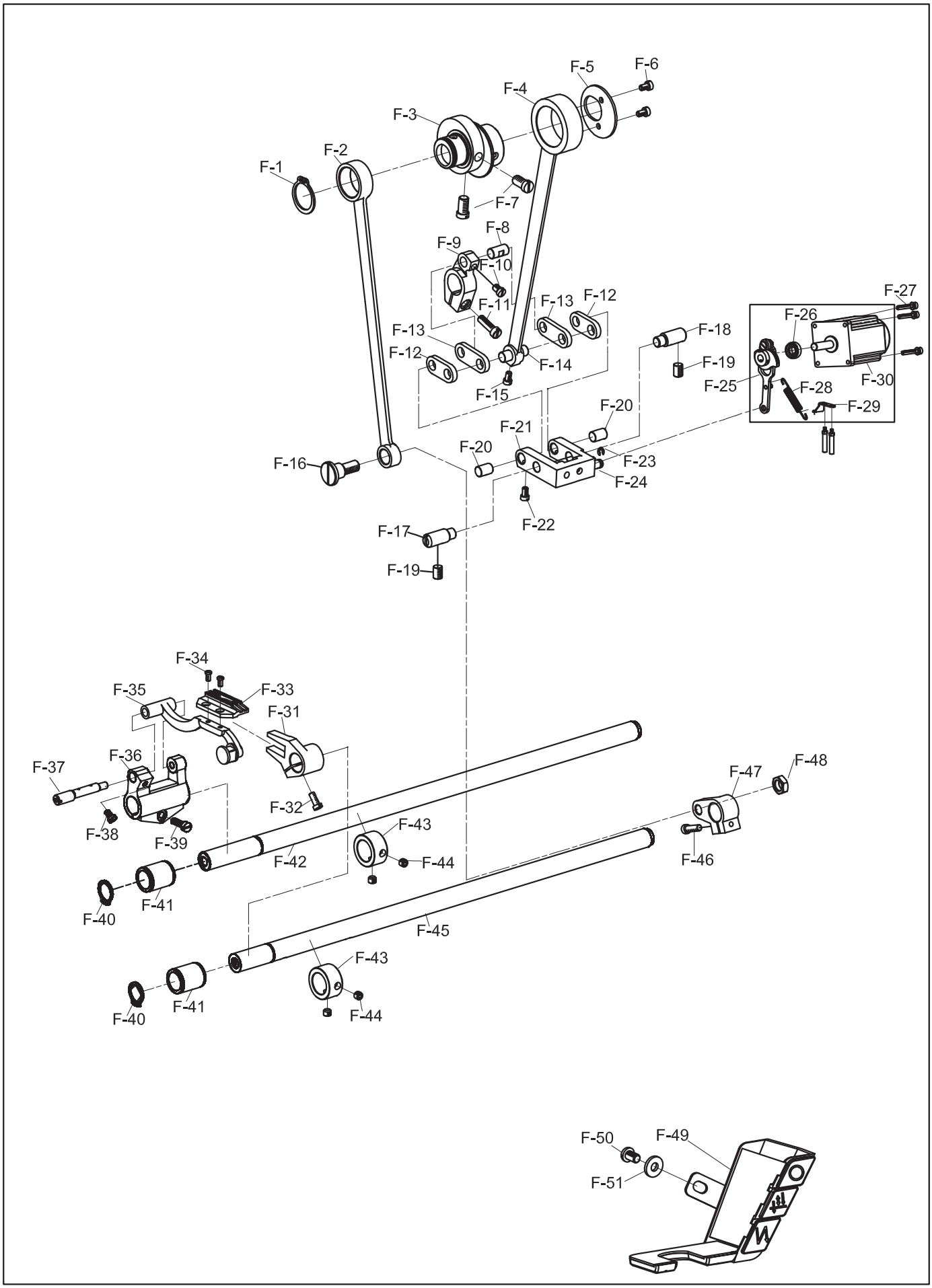

F 送料分组件
Feed mechanism components

序 号 Ref NO.	物 料号 part. NO.	名 称	Description	数量 Q'ty	备 注 Remark
F-1	10010089	挡圈	Snap ring	1	
F-2	10010084	抬牙连杆	Connecting rod	1	
F-3	10010115	送料偏心轮	Feed drive eccentric cam	1	
F-4	10010072	送料连杆	Connecting rod	1	
F-5	10010098	送料偏心轮盖板	Thrust cover	1	
F-6	10010643	螺钉	Screw	2	
F-7	10010092	螺钉	Screw	2	
F-8	10010096	销	Pin	1	
F-9	10010076	送布曲柄	Feed rocker	1	
F-10	10010071	螺钉	Screw	1	
F-11	10010095	螺钉	Screw	1	
F-12	10048736	送料短摆动板	Short link	2	
F-13	10048696	送料长摆动板	Long link	2	
F-14	10010069	销	Pin	1	
F-15	10010071	螺钉	Screw	1	
F-16	10010091	螺钉	Screw	1	
F-17	100001677	销	Pin	1	
F-18	100001671	销	Pin	1	
F-19	10010678	螺钉	Screw	2	
F-20	10010087	销	Pin	2	
F-21	100005407	送料摆动板座组件	Feed adjusting ASM	1	
F-22	10010071	螺钉	Screw	2	
F-23	10010649	挡圈	Snap ring	2	
F-24	100001346	销	Pin	1	
F-25	100009756	倒回缝组件	Rewind the seam ASM.	1	
F-26	100001355	油封	Oil sea	1	
F-27	10065628	组合螺钉	Screw	3	
F-28	100008401	拉簧	Stretch Springs	1	
F-29	100006644	拉簧固定板	Mounting plate	1	
F-30	100009144	步进电机	Step per motor	1	

F 送料分组件
Feed mechanism components

序 号 Ref NO.	物 料号 part. NO.	名 称	Description	数量 Q'ty	备 注 Remark
F-31	10042079	抬牙叉形曲柄组件	Lif ing fork	1	
F-32	10004628	螺钉	Screw	1	
F-33	10052531	送料牙	Feed dog	1	
F-34	10010099	螺钉	Screw	2	
F-35	100005713	牙架	Tooth base	1	
F-36	10004474	牙架座	Feed bar driving crank	1	
F-37	10004440	销	Pin	1	
F-38	10010074	螺钉	Screw	1	
F-39	10004993	螺钉	Screw	1	
F-40	10010090	挡圈	Snap ring	2	
F-41	10014116	轴套	Bearing support	2	
F-42	100001689	送料轴	Feed rocker shaft	1	
F-43	10010542	挡圈	Thrust collar	2	
F-44	10038073	螺钉	Screw	4	
F-45	100001690	抬牙轴	Feed rocker shaft	1	
F-46	10010095	螺钉	Screw	1	
F-47	10010086	抬牙后曲柄	Lif ing rocker	1	
F-48	10004475	螺母	Nut	1	
F-49	100009211	机头灯组件	Head lamp assembly	1	
F-50	10008934	螺钉	Screw	1	
F-51	10010649	垫圈	Was her	1	

H 剪线分组件
Thread trimmer components

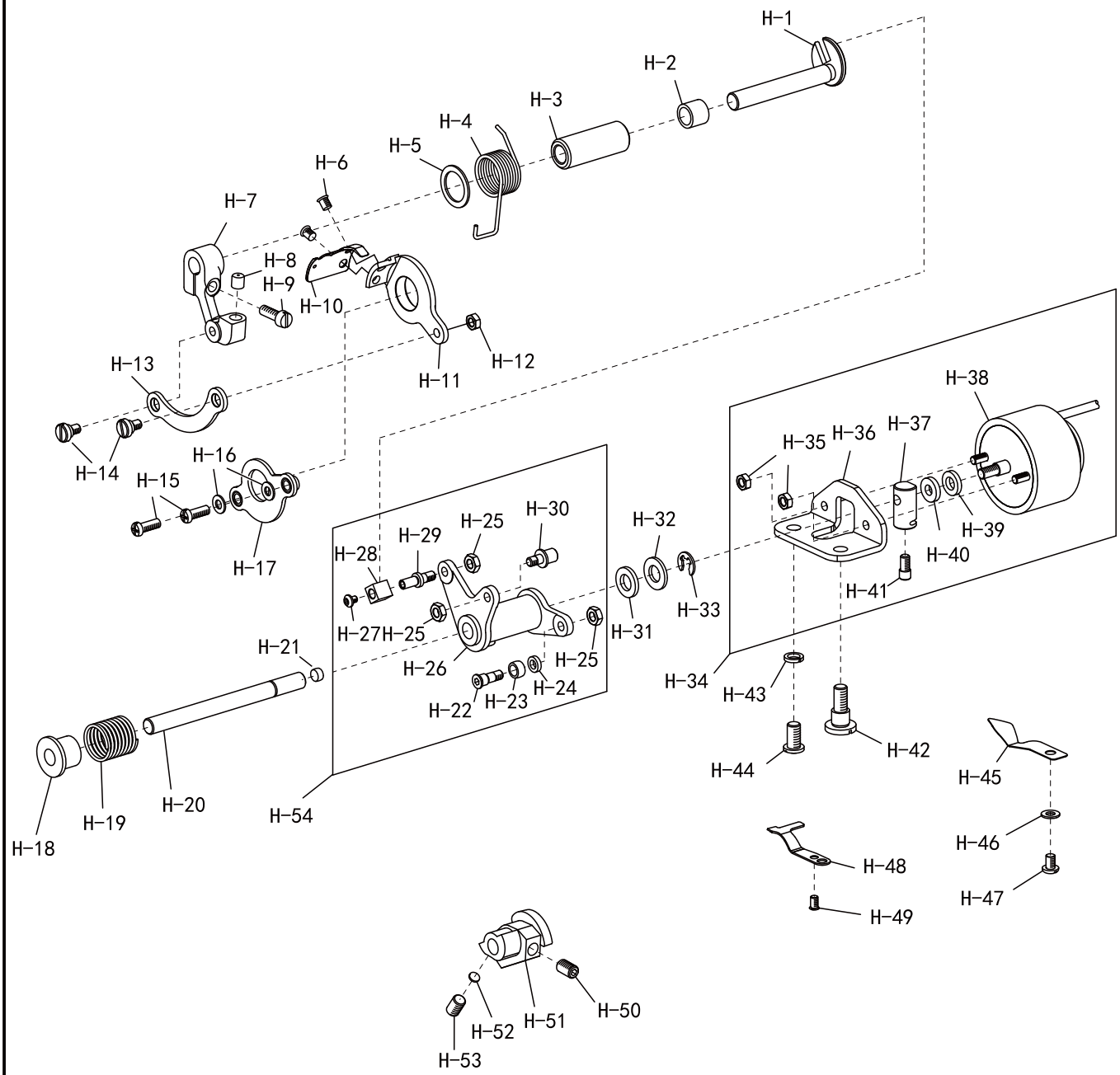

H 剪线分组件
Thread trimmer components

序 号 Ref.No.	物 料 号 Part.No.	名 称	Description	数量 Q'ty	备 注 Remark
H-1	10008866	切线驱动曲柄轴	Trimming crank shaft	1	
H-2	10011630	曲柄轴短套	Short bushing	1	
H-3	10011630	切线轴套	Short bushing	1	
H-4	10011649	弹簧	Spring	1	
H-5	10008865	垫圈	Washer	1	
H-6	10011588	螺钉	Screw	2	
H-7	10058043	切线驱动曲柄	Trimming crank	1	
H-8	10011580	曲柄止动块	Block	1	
H-9	10008863	螺钉	Screw	1	
H-10	10011494	动刀	Round knife	1	
H-11	10004640	动刀架	Round knife bracket	1	
H-12	10011578	螺母	Nut	1	
H-13	10031612	刀轴连杆	Knife shaft crack rod	1	
H-14	10011514	螺钉	Screw	2	
H-15	10013541	螺钉	Screw	2	
H-16	10013154	垫圈	Washer	2	
H-17	10008856	刀架压板组件	Knife holder ASM.	1	
H-18	10014196	弹簧端盖	Spring cover	1	
H-19	10008812	弹簧	Spring	1	
H-20	10011697	切刀驱动轴	Trimming shaft	1	
H-21	10050266	消音塞	Silencer plug	1	
H-22	10004707	螺钉	Screw	1	
H-23	10004651	滚柱	Roller bearing	1	
H-24	10025576	垫圈	Washer	1	
H-25	10011578	螺母	Nut	3	
H-26	10004648	切线凸轮曲柄	Trimming cam crank	1	
H-27	10025577	螺钉	Screw	1	
H-28	10004703	凸轮曲柄滑块	Slide block	1	
H-29	10004704	销	Pin	1	
H-30	10004705	左曲柄滚柱	Pin	1	
H-31	10011650	垫圈	Washer	1	
H-32	10003031	垫圈	Washer	1	
H-33	10009654	挡圈	Snap ring	1	
H-34	10031414	剪线电磁铁组件	Thread trimmer solenoid ASM.	1	
H-35	10009471	螺母	Nut	2	
H-36	10008854	剪线电磁铁安装座	Solenoid base	1	
H-37	10011607	剪线电磁铁连接体	Solenoid connecting shaft	1	
H-38	10031415	剪线电磁铁	Thread trimmer solenoid	1	
H-39	10011606	垫圈	Washer	1	
H-40	10011845	垫圈	Washer	1	
H-41	10028999	螺钉	Screw	1	

H 剪线分组件
Thread trimmer components

序 号 Ref.No.	物 料 号 Part.No.	名 称	Description	数量 Q'ty	备 注 Remark
H-42	10012467	螺钉	Screw	1	
H-43	10003077	垫圈	Washer	1	
H-44	10011605	螺钉	Screw	1	
H-45	10058067	分线器	Dispart	1	
H-46	10013154	垫圈	Washer	1	
H-47	10014474	螺钉	Screw	1	
H-48	10011421	定刀	Fixed knife	1	
H-49	10011422	螺钉	Screw	1	
H-50	10013465	螺钉	Screw	1	
H-51	10010736	剪线凸轮	Thread trimmer cam	1	
H-52	10023739	剪线凸轮垫	Cam collar	1	
H-53	10013465	螺钉	Screw	1	
H-54	10011686	切线凸轮曲柄组件	Trimming cam crankAsm	1	

I 润滑分组件
Lubrication components

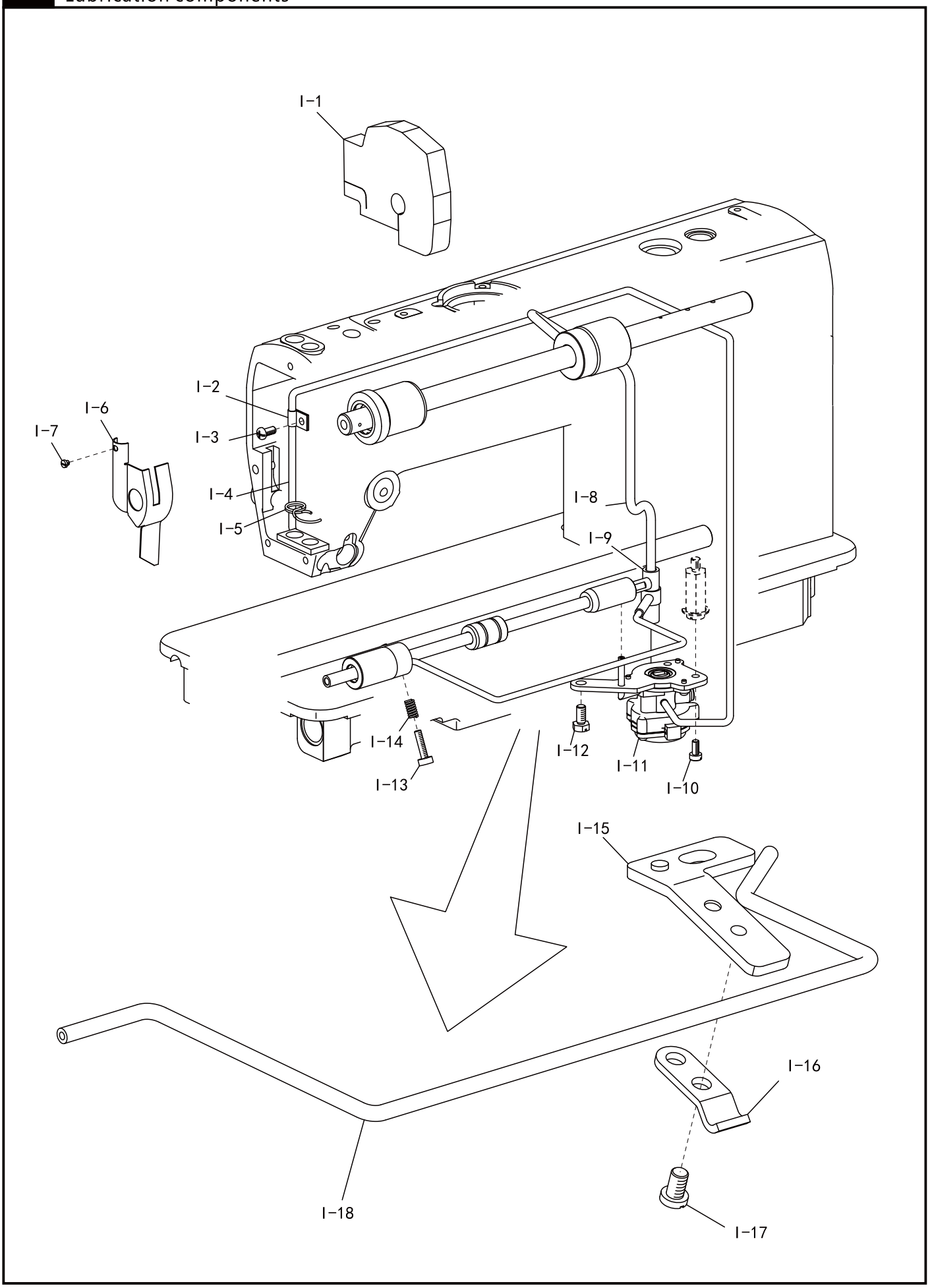

I 润滑分组件
Lubrication components

序 号 Ref.No.	物 料 号 Part.No.	名 称	Description	数量 Q'ty	备 注 Remark
I-1	10014197	挡油海绵	Foam rubber	1	
I-2	10010294	回油管夹	Oil felt preser	1	
I-3	10008934	螺钉	Screw	1	
I-4	10007795	油管	Tube	1	
I-5	10042077	回油毡夹	Oil felt preser	1	
I-6	100002229	面部防油板	Oil stoper	1	
I-7	10005558	螺钉	Screw	1	
I-8	10050666	上轴供油管	Main shaft oil tube	1	
I-9	10010340	供油管接头	Oil tube holder	1	
I-10	10010066	螺钉	Screw	1	
I-11	10008817	油泵部件	Oil pump	1	
I-12	10050422	螺钉	Screw	1	
I-13	10008831	螺钉	Screw	1	
I-14	10008806	弹簧	Spring	1	
I-15	10012443	油管支撑板	Plate	1	
I-16	10012445	油管压板	Tube holder	1	
I-17	10010074	螺钉	Screw	1	
I-20	10008807	旋梭供油管	Oil tube	1	

J 油盘、膝抬压脚分组件
Presser foot components of oil plate knee lift

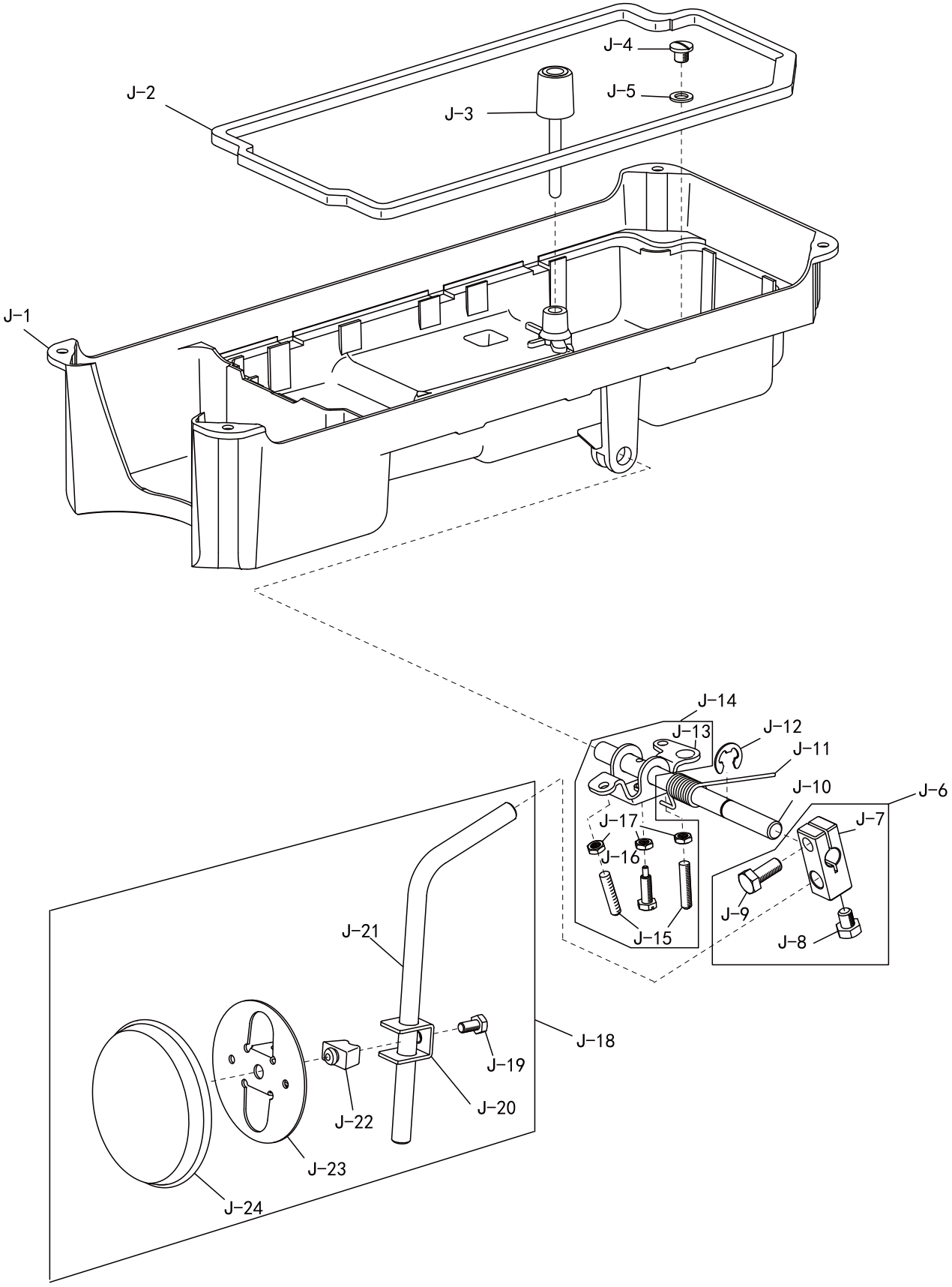

J 油盘、 膝抬压脚分组件
presser foot components of oi l plat ekne e lift

序 号 Ref NO.	物 料号 part. NO.	名 称	Description	数量 Q'ty	备 注 Remark
J-1	10008313	油盘	oil reservoir	1	
J-2	10014194	油盘垫	oi l reservoir gasket	1	
J-3	10009984	抬压脚顶销	pin	1	
J-4	10009991	螺钉	screw	1	
J-5	10009988	垫圈	Rubber ring	1	
J-6	10002562	操纵杆接头组件	Bracket ASM.	1	
J-7	10003896	操纵杆接头	Bracket	1	
J-8	10002610	螺钉	screw	1	
J-9	10002613	螺钉	screw	1	
J-10	10058503	抬压脚轴	knee pressing shaft	1	
J-11	10003893	弹簧	spring	1	
J-12	10002559	挡圈	snap ring	1	
J-13	10002563	抬压脚双向曲柄部件	crank ASM.	1	
J-14	10009987	抬压脚双向曲柄	crank	1	
J-15	10003895	螺钉	screw	2	
J-16	10003898	螺钉	screw	1	
J-17	10003890	螺母	Nut	3	
J-18	10009985	操纵杆部件	knee pressing plate ASM.	1	
J-19	10003894	螺钉	screw	1	
J-20	10003897	操纵杆接头	knee pressing plate holder	1	
J-21	10003901	操纵杆	knee pressing plate rod	1	
J-22	10003900	操纵杆垫	knee pressing plate rubber	1	
J-23	10003891	操纵板	knee pressing plate	1	
J-24	10004223	操纵板软垫	knee pressing cover	1	

K 过线架分组件
Components of thread-running stand

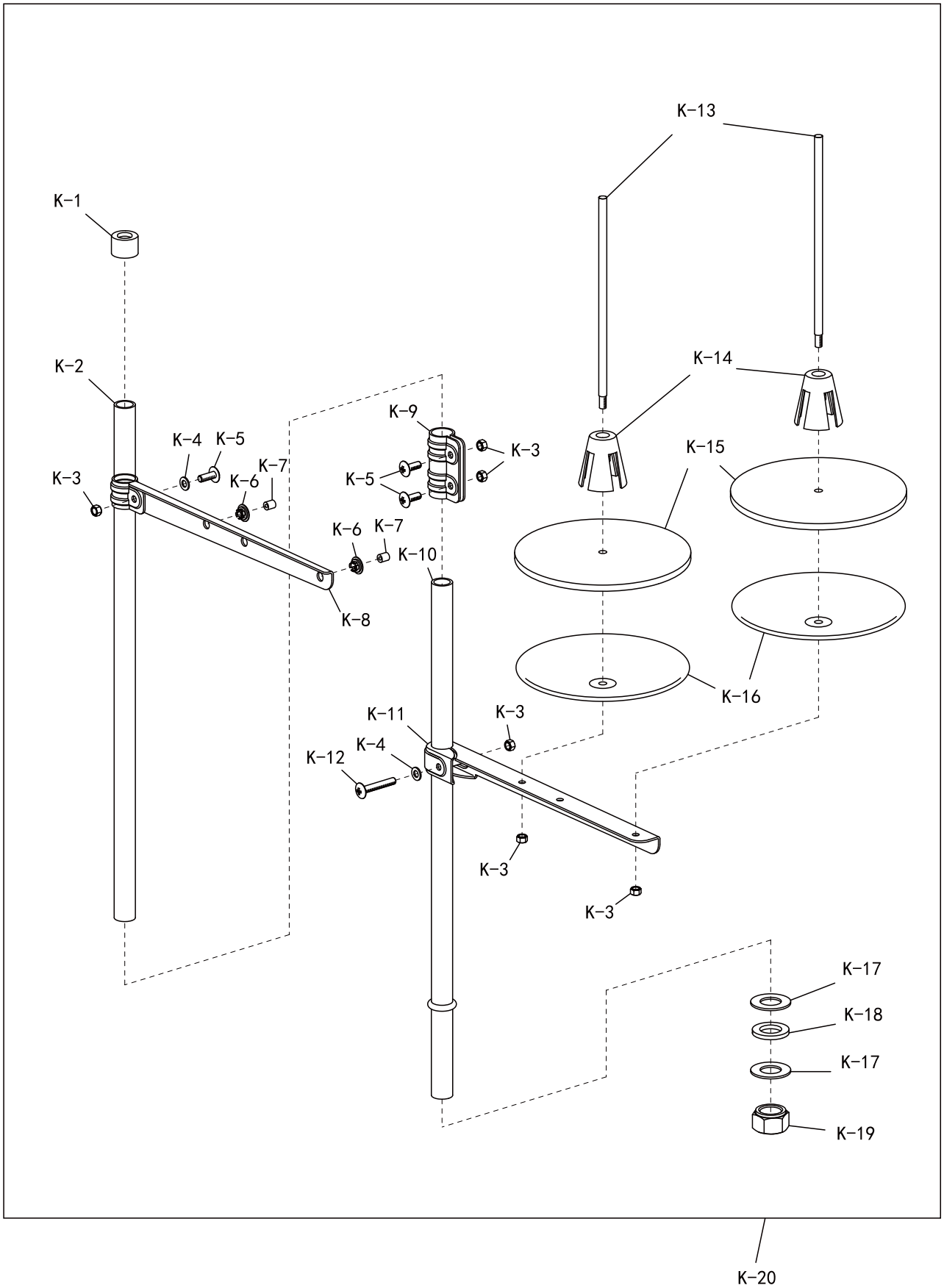

K 过线架分组件
Components of thread-running stand

序 号 Ref.No.	物 料 号 Part.No.	名 称	Description	数量 Q'ty	备 注 Remark
K-1	10004282	撑管套	Column cap	1	
K-2	10004293	线架上撑管	Column pipe (upper)	1	
K-3	10002953	螺母	Nut	6	
K-4	10003022	垫圈	Washer	2	
K-5	10003301	螺钉	Screw	3	
K-6	10004285	过线管套	Thread guide bushing	2	
K-7	10004289	过线管	Thread guide pipe	2	
K-8	10004298	上过线架	Thread hanger (upper)	1	
K-9	10004286	撑管夹	Column pipe connector	1	
K-10	10004291	线架下撑管	Column pipe (lower)	1	
K-11	10004284	下过线架	Thread hanger (lower)	1	
K-12	10003312	螺钉	Screw	1	
K-13	10004288	线轴	Spool pin	2	
K-14	10004287	线盘塑料压块	Spool cushion	2	
K-15	10004281	线盘软垫	Spool mat	2	
K-16	10004299	线盘	Spool seat disc	2	
K-17	10004290	垫圈	Washer	2	
K-18	10004295	垫圈	Washer	1	
K-19	10002985	螺母	Nut	1	
K-20	10002985	螺母	Nut	1	

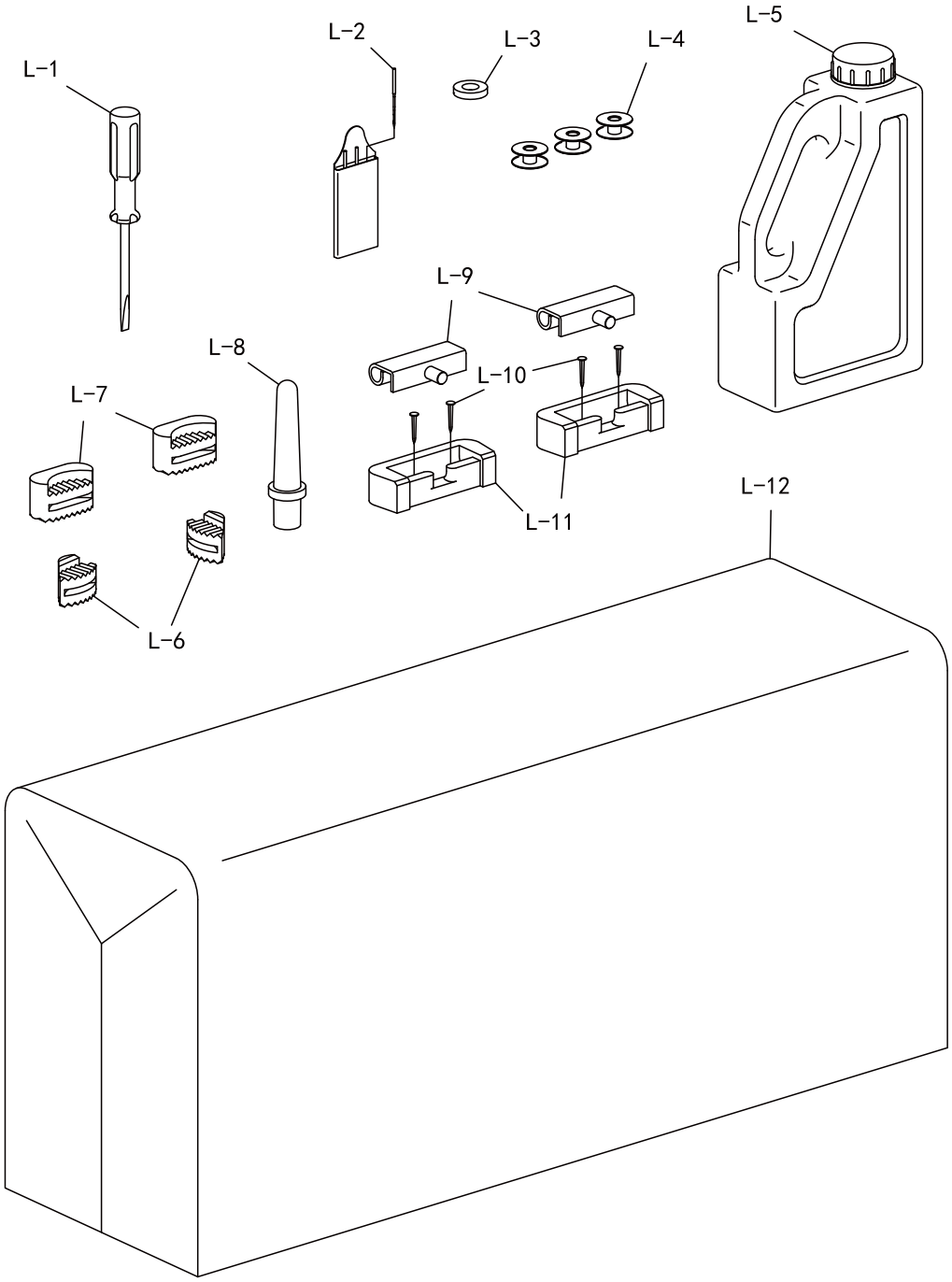
L-1
L-2
L-3
L-4
L-5
L-6
L-7
L-8
L-9
L-10
L-11
L-12

L 附件
Accessories

序 号 Ref.No.	物料号 Part No.	名 称	Description	数量 Q'ty	备 注 Remark
L-1	10010995	中螺丝刀	Screw driver	1	
L-2	10034917	机针	Needle	3	
L-3	10003892	油盘磁铁	Oil reservoir magnet	1	
L-4	10025484	梭芯	Bobbin	3	
L-5	10004455	油箱部件	Oil bottle with oil	1	
L-6	10009986	油盘支座	Oil reservoir seat	2	
L-7	10009993	油盘座垫	Oil reservoir cushion	2	
L-8	10050425	机头支柱	Frame support bar	1	
L-9	10004466	机头连接钩部件	Head connecting hook	2	
L-10	10003889	机头连接钩座钉	Nail	4	
L-11	10011041	机头连接钩座	Head connecting hook socket	2	
L-12	10039436	机头罩	Head cover	1	

M 电控分组件
Driver-by-wire components

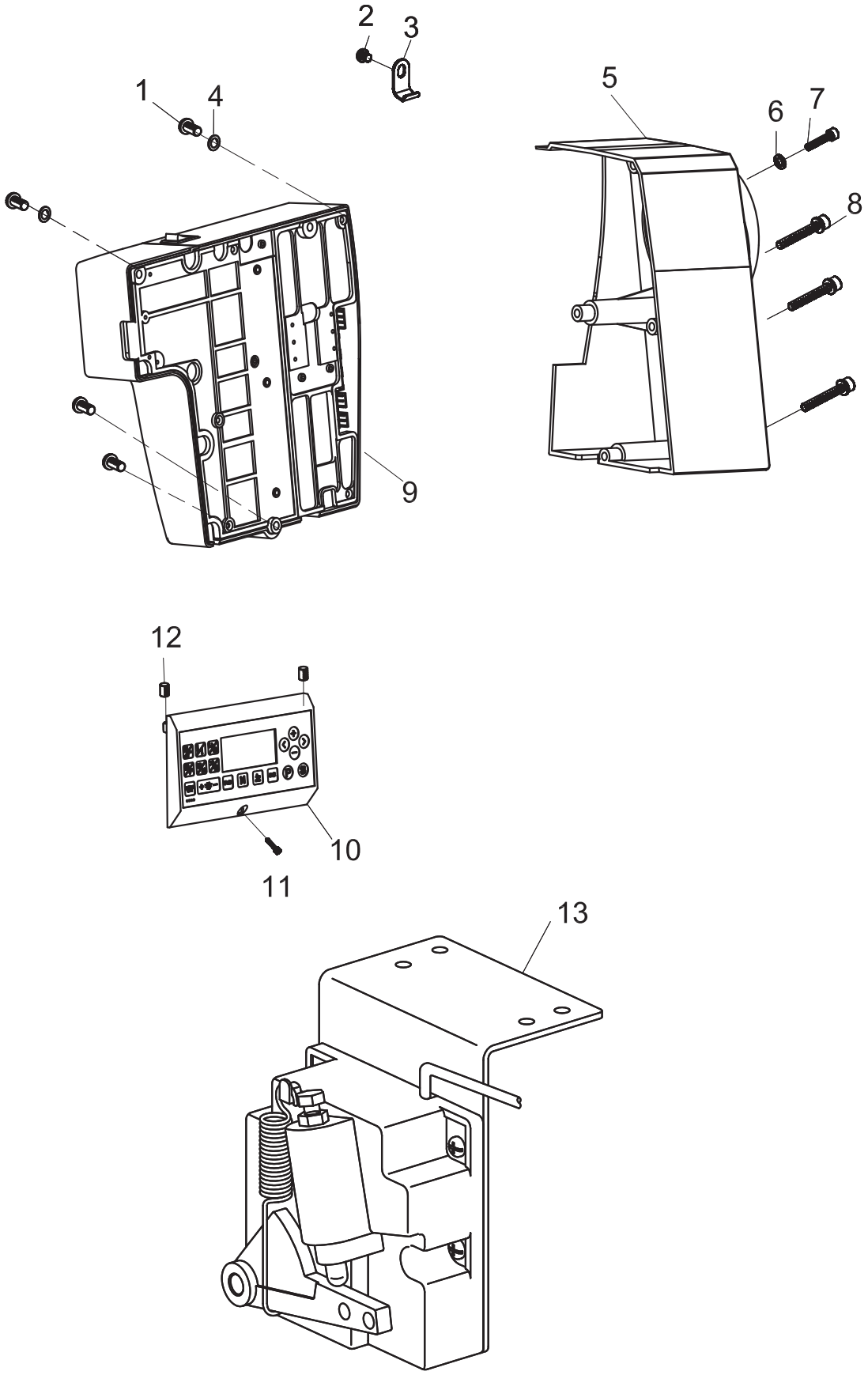

M 电控分组件
Drive-by-wire components

序 号 Ref NO.	物 料号 part NO.	名 称	Description	数量 Q'ty	备 注 Remark
M-1	100008977	螺钉	Screw	4	
M-2	10010899	螺钉	Screw	1	
M-3	10035172	电线夹	Cord holder	1	
M-4	10006115	垫圈	Snap ring	1	
M-5	100009210	马达外罩	Motor housing	1	
M-6	10006115	垫圈	Snap ring	1	
M-7	10012080	螺栓	Bolt socket	1	
M-8	10005692	螺栓(带垫圈）	Bolt socker(Washer)	3	
M-9	100009045	电控	Control box	1	
M-10	100009046	操作屏	Key Screen	1	
M-11	100004088	螺钉	Screw	1	
M-12	10005692	螺钉	Screw	2	
M-13	100006467	踏板组件	Pedal unit asm	1	

□除调整线迹外,机器的调试及维修非专业人员请勿擅自操作。

Besides adjusting stitch, please laypeople don't debug or maintaine.

□个别零件进行更改设计时，恕不另行通知。

Parts are subject to changes in design without prior notice.

西安标准工业股份有限公司　　XI'AN TYPICAL INDUSTRIES CO., LTD.

地址：中国.西安
电话:销售业务:029-83911335 83911339
售后服务:029-83911407
传真: 029-83911342 83911111
邮编: 710612
E-mail:typical@chinatypical.com
Http://www.chinatypical.com

2025.03.03 ①